cortartec

www.cortartec.net

Sub Channel Systems

Product Technical Catalogue

CORTAZ-SC-EN/04.16

Sub Channel Systems - Overview

HMP Sub channel systems are used for stone cladding on to non-load bearing walls or on to walls structures where there are high projection sizes. By using specially designed channel support and restraints, channels are spanned between floor levels, creating a sub frame on to which installation is enabled by using set screws and nuts.

•Channels are fixed on to channel supports that are fastened to load bearing beams, spanning between floor levels overlaying in front of the thermal insulation

• Stone fixing is done with anchors that are fixed on to channels either with set screws or lock nut sets

• High load bearing capacity to fit projection sizes up to 360 mm

• Greater projection sizes are achieved with special design

• Fully adjustable and allows quick and easy installation

• Lower drilling points increases production rate and reduces cold bridging

HMPC-HCA Sub Channel Fixing System

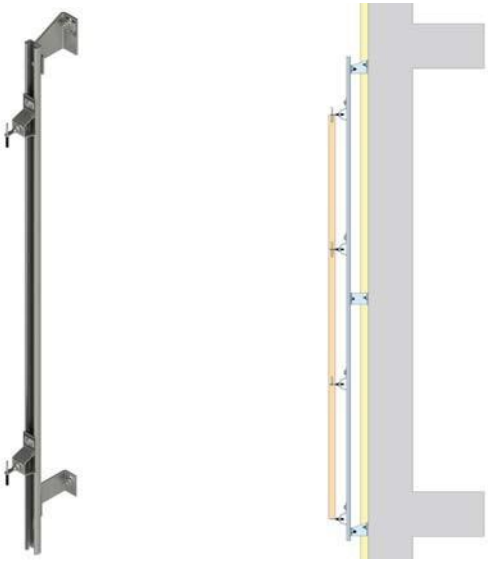

Sub Channel Fixing System with Vertically spanned channels

HMPA-HC2 Sub Channel Fixing System

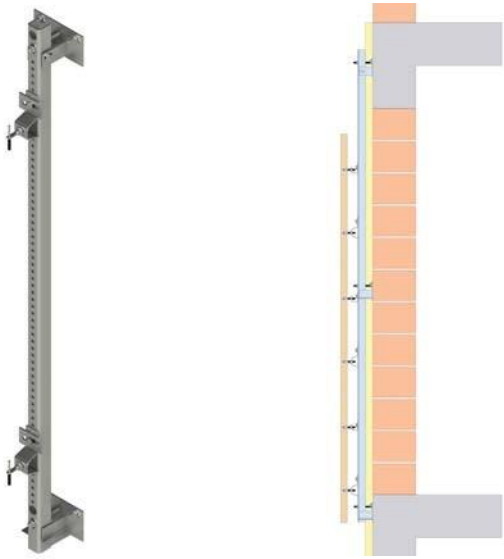

Sub Channel Fixing System with Vertically & Horizontally spanned channels

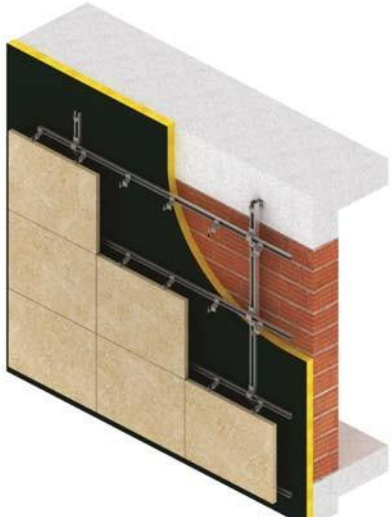

HMPC-HC1/H Sub Channel Fixing System

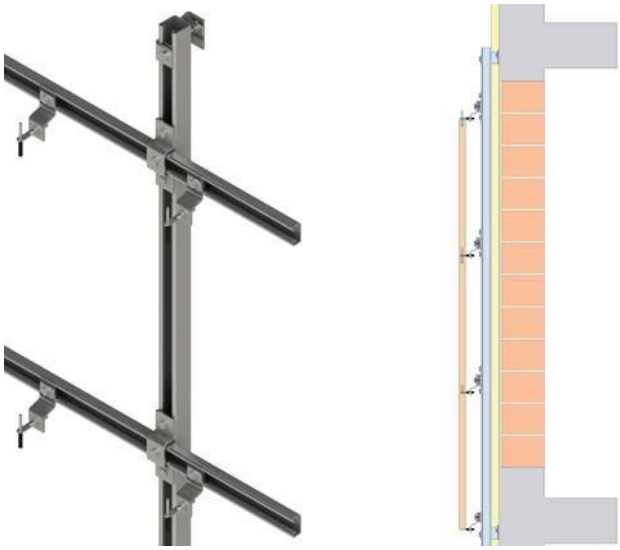

Aluminium Sub Channel Systems - Overview

Fixing systems with aluminium sub channel systems are preferred due to its light weight and easiness of cutting and drilling. These systems are used for the installation of cladding panels such as, natural stone panels , ceramic panels and fibre cement panels.

Three dimensional adjustability is enabled and fast installation is possible due to the light weight of aluminium and the ease of cutting and drilling on site.

- Fixing to sub channel structure which is attached to load bearing beams
- Light weight and easy to install
- Possibility of cutting and drilling aluminium channels provides flexibility
- Fully adjustable and allows fast installation with the use of self drilling screws

HMP-ALU-U Sub Channel Fixing System

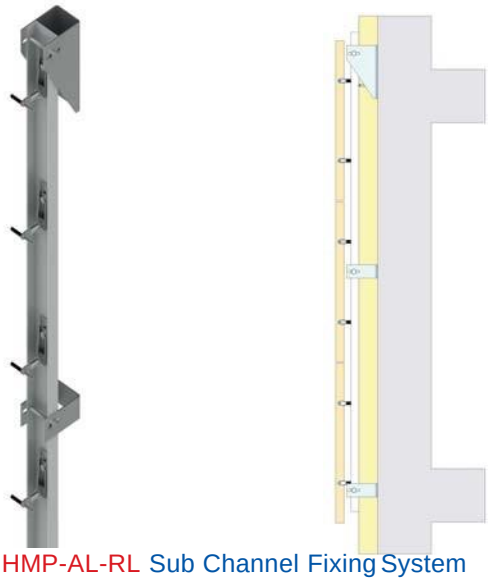

Sub Channel Fixing System with Vertically spanned channels

HMP-AL-RL Sub Channel Fixing System

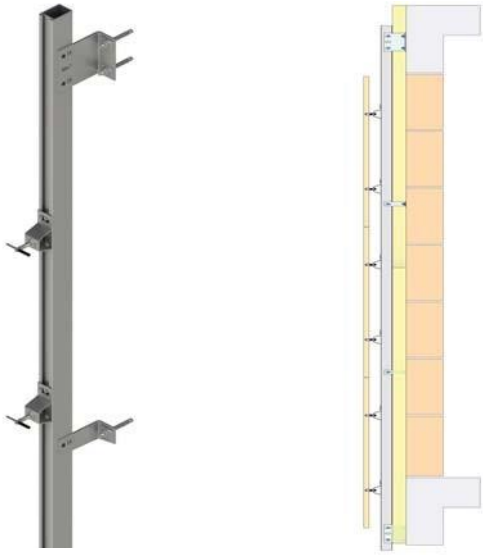

Sub Channel Fixing System with Vertically & Horizontally spanned channels

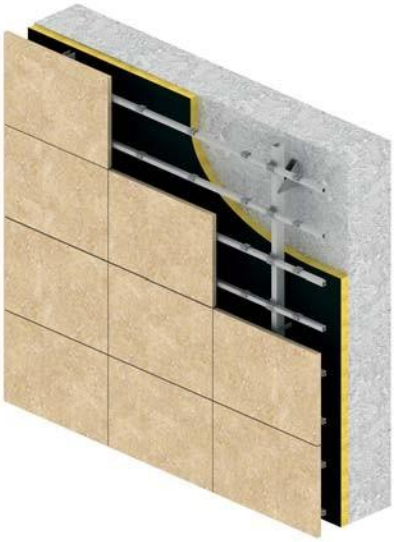

HMP-ALU-AG Sub Channel Fixing System

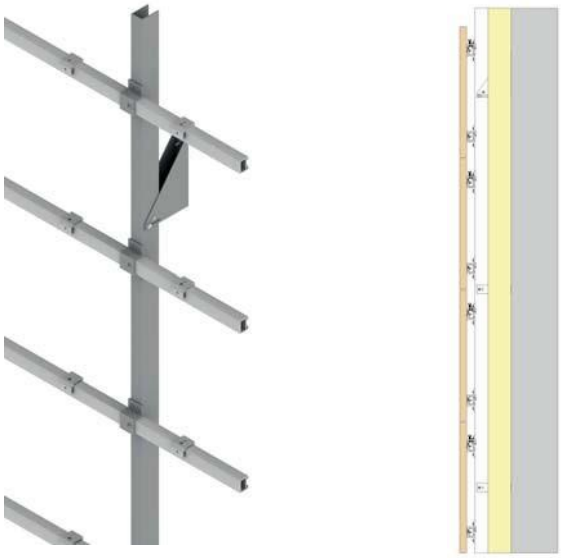

HMP Sub Channel Systems - Product Range

Sub channel systems manufactured out of cold rolled steel and stainless steel. Various type of systems can be formulated with the availability of different types of channel supports and restraints. Steel channel systems are preferred for high load stone facade installations. Available in Stainless steel and hot dip galvanized mild steel.

Sub Channel System

HMPA-HC2 | HMPA-HC3 | HMPC-HC1 | ATS | HMPC-HC1/H | HMPA-HC1/H

Steel Channels

HMPA U Channel | HMPL L Channel | HMPB C Channel | HMPC C Channel | HMPS Toothed channel

Channel Supports

HCSP1 | HCSP2 | HCSP3 | HCSP4 | HCSP5 | ATS-S

Channel restraints

HCRS1 | HCRS2 | HCRS5 | HCRS-S | ATS-R

Adjustable Anchors

HZ02 Z Anchor | HRS1 Restraint Anchor | HZ00 Z Anchor | HZ01 Z Anchor | HCC-J Connection

HMP-ALU Aluminium Sub Channel Systems

Sub channel systems manufactured out of extruded aluminium. Various type of systems can be formulated to accommodated the requirements of the project. Aluminium channels are used to fix thin stone, fibre cement, ceramic panels and other light weight cladding materials. Available in aluminium grade T6066.

Sub Channel System

HMP-ALU-U | HMP-ALU-SP | HMP-ALU-P | HMP-ALU-AG | HMP-ALU-SP/H | HMP-ALU-KF






Steel Channels

HMP-ALU-U | HMP-ALU-BV | HMP-ALU-RV | HMP-ALU-T | HMP-ALU-BH | HMP-ALU-P





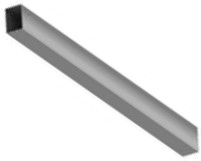


Supports & Restraints

HCSP3-AL | HCSP4-AL | HCSP6-AL | HCRS3-AL | HCR5-AL | HCRS6-AL






Adjustable Anchors

BA Body anchor | HZ02-SPX Z anchor | HZ00-SPX Z anchor | HA03-SPX L anchor




Aluminium brackets

HM-AG-G Agraf bracket | HM-AG-P Agraf bracket | HM-AG-K Agraf bracket | HCC-ALU Connection | HCC-ALU Connection





Sub Channel Systems - Technical Information

Rainscreen, Ventilated Facades - Overview

The term “ventilated facade” is used for the latest technology in natural stone installation. Other terms such as mechanical fixing, anchoring systems and fixing systems are also used.

A ventilated system can be described as following:

•A system of façade construction that has advantages of energy saving and low maintenance of stone slabs.

•The system is formed by an insulation layer fixed on the building structure and a layer of stone cladding supported on to the substrate with suitable fixing systems.

•Joints between stone panels are kept opened to allow air circulation and accordingly reduction of the thermal loads of static air over the building external envelope

•Sufficient air gap is formed between the insulation and stone cladding. With the stack effect, an effective natural ventilation is created which benefits the entire construction system.

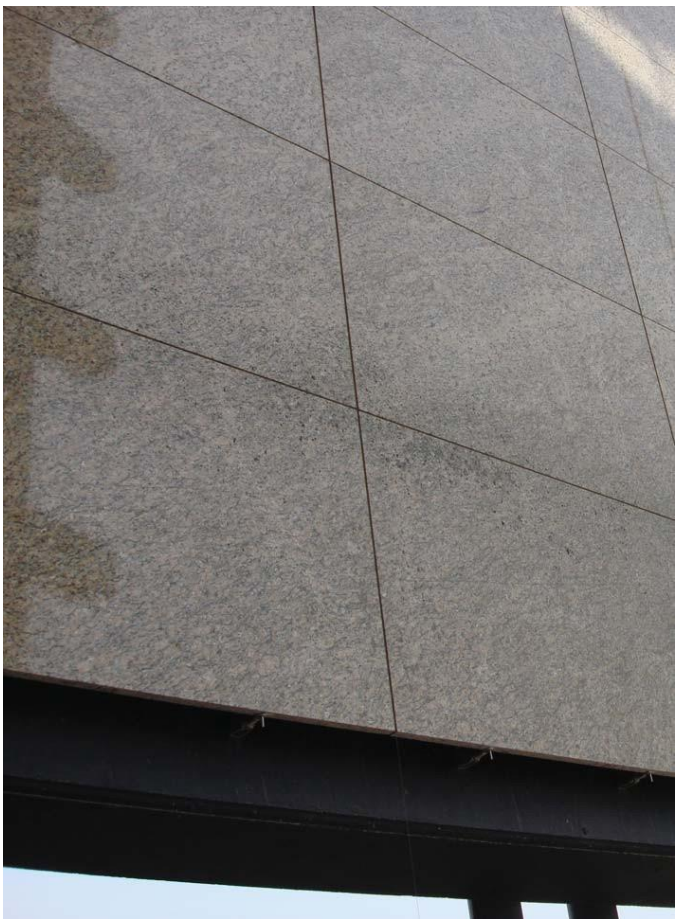

Rainscreen, Ventilated Facades- Advantages

1Reduced risk of cracking and detachment as each panel is supported independently and design of fixings are made according to the movement of the structure.

2Easy application through use of three dimensional adjustable fixing systems.

3Low Maintenance due to the high durability and excellent safety features.

4Protection of the wall structure against atmospheric agents because of two shell wall structure with insulation and air gap in between.

5Energy-saving because of prevention of thermal bridging by the insulation and the low anchoring points on the wall.

6Elimination of surface condensation (the presence of an air space helps expel water vapour from inside, reducing dampness caused by infiltrations).

7High safety and long life span as the fixing systems are designed and produced according to EN standards.

8Each panel can be replaced in case of any damage occurred to live impacts.

Sub Channel Systems - Technical Information

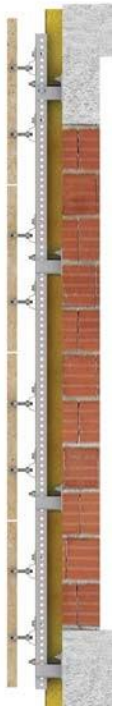

Stone Fixing Systems Overview

Natural Stones panels are supported with fixings in vertical or horizontal joints, depending on the location of the slab on the facade. The fixings enable three dimensional adjustability.

There are many types of fixing systems which are used for special circumstances and technical specifications of the project.

Natural stone fixing systems accommodate all types of backing walls. The following points are taken into consideration when designing a fixing system.

- Stone dimensions.
- Stone panel weight (dead load)
- Cavity structure: projection size and isolation.
- Application type: horizontal or vertical joint installation.
- Joint size.
- Structural wall backing.
- Height of facade.
- Relevant dynamic loads such as wind and seismic loads.
- Design criteria of the project.

Stone Fixing Systems - Advantages

1.Fixings manufactured to known and tested design criteria.

2.Frame, Fixings and Bolts are all corrosion resistant Stainless Steel and coated mild steel.

3.No bridging of cavity can occur, as brackets do not transport moisture. An open joints are kept which allow free ventilation.

4.The waterproof barrier is at the concrete face and this is continued into the window without interruption.

5.Joints between the stones can be maintained at a uniform size.

6.Thermal and substrate movement is accommodated into the joint.

7. The risk of progressive collapse is eliminated.

8. Individual stones can be replaced.

9.The Fixing System greatly reduces damage to the cavity insulation and cold reduces bridging.

10. Slabs are supported independently.

Channel Support

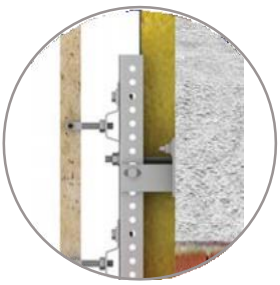

•Channel supports are used to fix the channels on to concrete beams with anchor bolts.

•Channel support bears the load that is transferred on to the channel.

Channel Restraint

•Channel restraints are used to fix the channels on the wall to hold the channels against wind pressure and suction.

•Channel restraints are used to fix the channel in the middle and at the bottom.

Channel

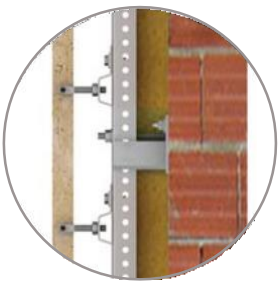

• Channel supports are fixed on to wall with suitable anchor bolts.

•Channel restraints are positioned in designated areas on order to prevent the channels from deflecting.

Load Bearing Anchor

Restraint Anchor

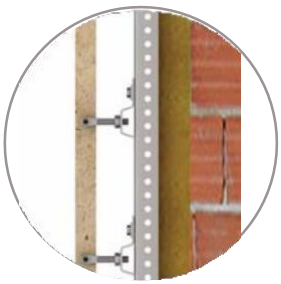

•Stone installation is made with suitable anchors by attachment on to the channels.

•Anchors are attached to the channel either by hex bolts ot lock nuts.

Sub Channel Systems - Design Principles

Ventilated facades are the most popular type of facade systems. These systems are prefered due to their functinonallty and most of all the because of their desgin possibilities to accomodate various types of claddings to buildings.

The desing of the fixing systems can be indivdually adopted to the structure and custom design can be made combining various type of components.The sub channels sytems comproising of both boths steel and aluminium components, act as the secondary structure between the wall and the cladding material.

The sub channel systems can be adjusted in three dimensions and are fixed to the main structure free of stress. Uneveness of the main structure and wall projections can be compnesated for perfect horizontal and vertical alingment.

In order to achieve a secure and functional fixing system correct design principles have to be considered.

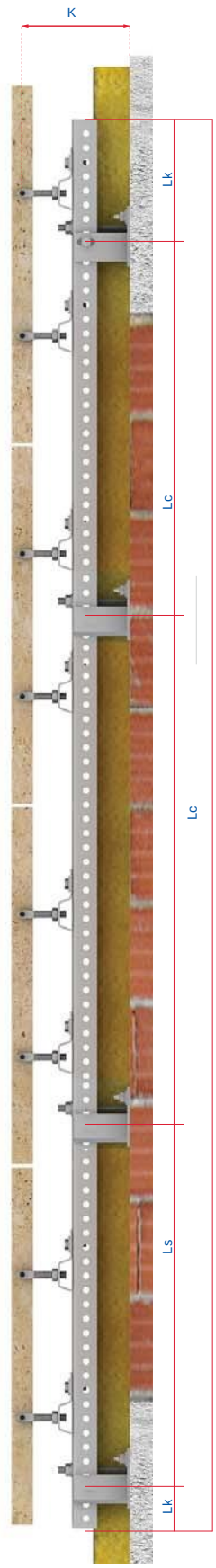

Required application information for design works

- Stone type and dimensions.
- Cavity structure: projection size and insulation.
- Application type: horizontal or vertical joint installation.
- Joint size.
- Structural wall backing.
- Height of facade.
- Relevant dynamic loads such as wind and seismic loads.
- Design criteria of the project.

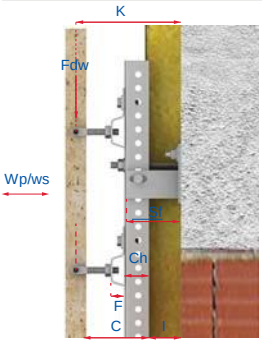

Design parameters

K:	projection size
Fdw:	dead Load
Wp / Ws :	wind pressure / wind suction
C:	wall cavity
I:	insulation thickness
Ch:	channel height
F:	anchor forming size
Sf:	support forming size
Lc:	channel length
Sc:	vertical channel spacing
Lk:	end channel spacing
Ls:	connection spacing

Sub Channel Systems Components

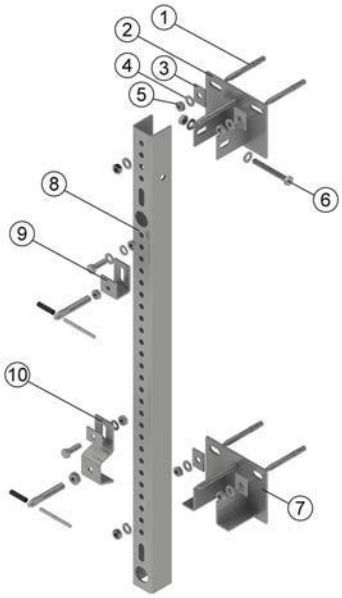

1Through Bolt
2 Channel Support
3 Plain Washer
4 Washer
5 Nut
6 Bolt Set
7 Channel Restraint
8 Channel
9Restraint anchor
10-Load bearing anchor

Sub Channel Systems - Design Principles

Installation at horizontal Joints

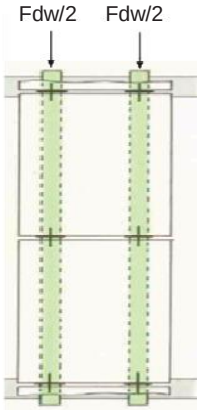

Installation at vertical Joints

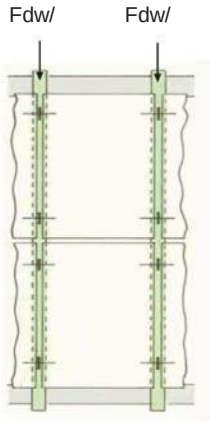

Fixing method & load distribution

• Sub channel systems are fixed to load bearing beams for support.

•Channels are fixed on to beams with channel supports.

•Fixing of channels in the middle to the wall with channel restraints are made to reduce deflection.

•When installation is at vertical joints, the sub channel system bears the whole load of the slabs installed.

•When installation is at horizontal joints, the sub channel system bears half the load of the slabs installed.

Elevation

W: Stone panel Width
Lc: Channel length Lf: Floor height

Wa: Cladding Width area
Ha: Claddign Height area
Sc: Channel spacing

Channel support

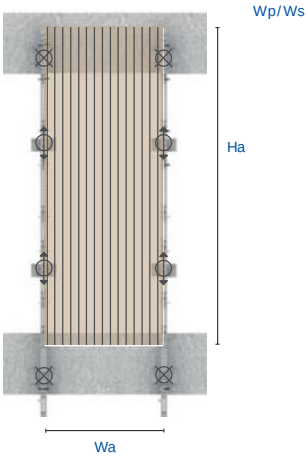

channel support - fixed
channel restraint - flexiable

Channel Restraint

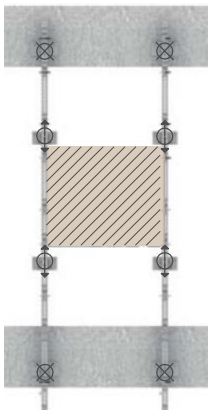

channel support - fixed
channel restraint - flexiable

Section

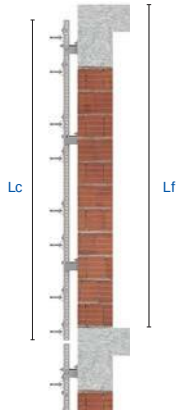

Load calculation for channel supports

Load bearing:
Subject to weight of cladding area

Fdw = St x Wa x Ha x ds x yf

Fdw:	Dead Load kN
St:	Stone panel thickness
Wa:	Width of area of cladding
Ha:	Height area of cladding
ds:	Volume of claddign material
yf:	Safety factor 1.35

To be verified against resistant loads

Restraint
subjected to wind pressure & suction load

W = Wn x b x a x yf

a:	distance between brackets
yf:	coefficient of wind load 1,4

Wn = Wm x æ x c

Wn:	normative zone wind load kN/m²
æ:	coefficient of wind load change according to certain height
c:	Aerodynamic coefficients
c:	+0,8 , for wind pressure load
c:	- 0,6 , for wind suction

Wn:	0,43 x 1, 05 x 0,8 = 0,36 kN
W:	0,36 x 1,25 x 1,0 x 1,4 = 0,63 kN

To be verified against resistemt wind pressure load

Wn = 0,43 x 1, 05 x - 0,6 = - 0,27 kN
W =- 0,27 x 1,25 x 1,0 x 1,4 =- 0,47 kN
To be verified against resistent wind suction load

Load calculation for channel restraints

Restraint
subjected to wind suction load

W = Wn x b x a x yf

a:	distance between brackets
yf:	coefficient of wind load 1,4

Wn = Wm x æ x c

Wn:	normative zone wind load kN/m²
æ:	coefficient of wind load change according to certain height
c:	Aerodynamic coefficients
c:	- 0,6 , for wind suction

Wn = 0,43 x 1, 05 x - 0,6 = - 0,27 kN
W =- 0,27 x 1,25 x 1,0 x 1,4 =- 0,47 kN
To be verified against resistent wind suction load

Sub Channel Systems - Design Principles

Ventilated Facades

Ventilated facade systems are a construction which offer both aesthetic quality and effective insulation permitting energy savings. It consists of an outer cladding, an air space at least 50 mm, a sub channel sytems made of steel or aluminium components that are anchored to the building and an insulating layer secured to the outer wall of the building.

The main functions of the outer cladding are aesthetic and protective. The air gap is essential for activating the natural ventilation that is necessary for the system to function as a whole. The sub channel system ensures stability of the cladding system, while the insulating layer, usually consisting of self-supporting water-repellent glass wool panels, takes care of adequate thermal stability.

Ventilated facades aid natural ventilation, reduce drastically damp on walls and therefore the problem of condensation. The building breathes really better. Ventilated facades also guarantee protection against acid rain and smog absorption.

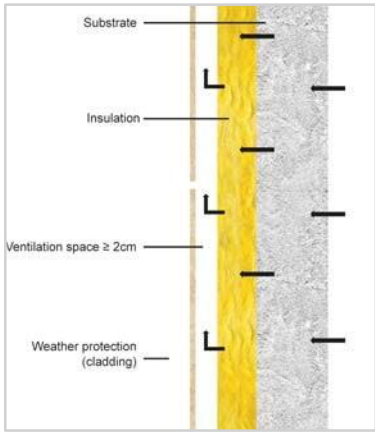

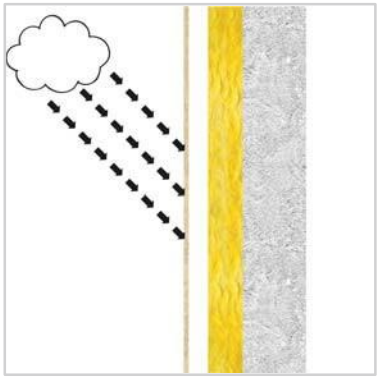

The entire construction is weather proof and non ageing. Wall cladding enhances the safety and longevity of a building. Consistent separation between outer cladding and insulation and structural framework protects the building from weathering effects.

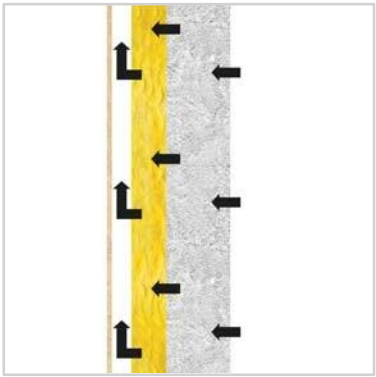

The air gap prevents heat accumulation and damage due to moisture. Load-bearing outside walls and the insulation in particular remain dry and in proper function. The overall construction continues to allow diffusion of moisture.

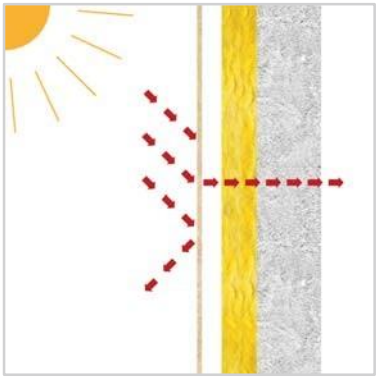

Cooling and heat losses in winter as well as heating up in summer will be prevented.

Adequate cavity space between the classing and the insulation acts as a natural insulator with the stack effect.

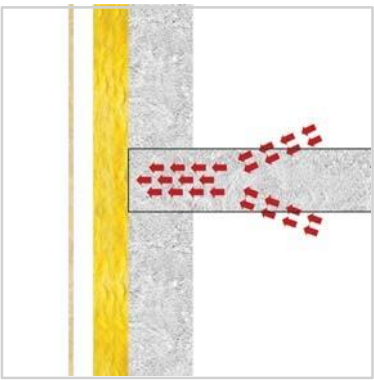

Formation of thermal bridges will be minimised.

Low anchoring points on the wall and the use thermal breaks increase the protection against themal bridges.

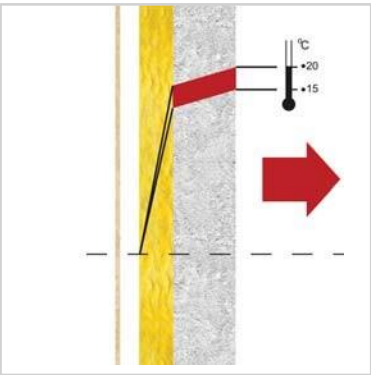

The insulation ensures maximum heat storage in the inside of the building.

Comfortable room climate is achieved.

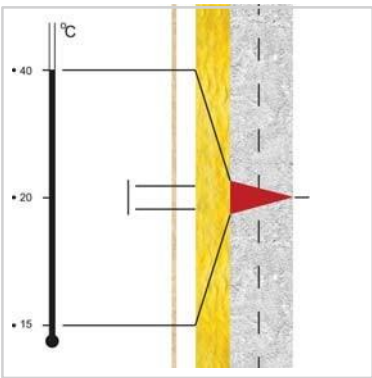

The suspended rear ventilated facade shields the building from strong thermal loading

Sub Channel Systems - Design Principles

Thermal insulation

The rear-ventilated facade system can be designed for various energy requirements, with individually measured insulation materials of any desired thickness. This makes the achievement of U-values possible that are usually characteristic of low-energy or passive homes and surpass the thresholds presented in the recent energy savings regulations. In respect to energy requirements, the insulation achieves the highest possible heat retention values for the structure, while it compensates high temperatures in the summer from within.

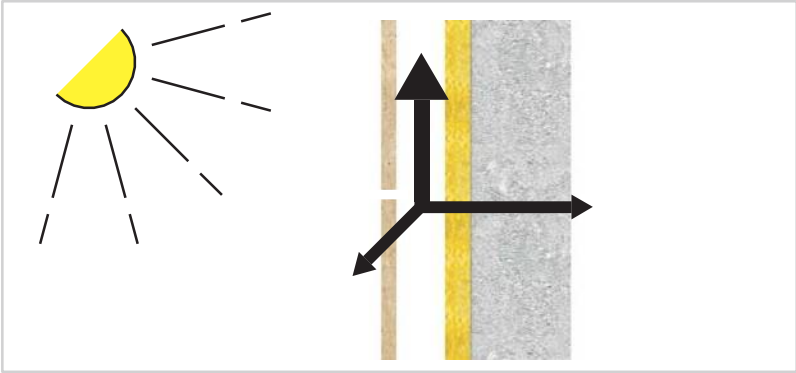

Rain Protection

Due to a constant exposure to climate conditions, fissures and moisture damages occur over time. Rear-ventilated facades belong to wear class III and are resistant to driving rain. Moisture is quickly removed through the ventilated space between insulating material and cladding (weather protection). The rain protection of the rear-ventilated facade works on two levels: The ventilation gap functions as a pressure compensation room, which ensures that, in a worst-case scenario, driving rain is drained over the back of the cladding, thus protecting the thermal insulation from wetness. Hence, it is possible to construct rear-ventilated facades with open, horizontal seams without decreasing the protection against rain.

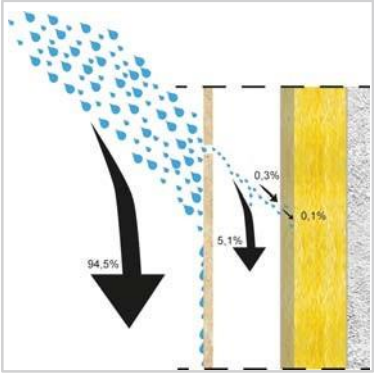

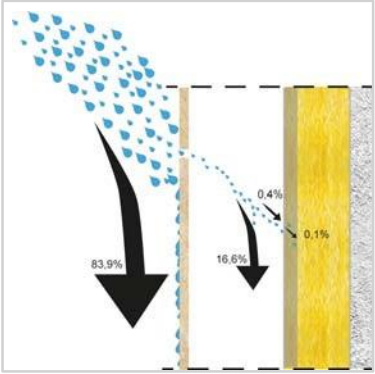

Protection against moisture and condensation

Due to the structure of the rear-ventilated facade, the vapour diffusion resistance decreases from the internal to the external walls. Any moisture from condensation, or accumulated during construction, is channeled through the ventilated space and contributes to a healthy and comfortable indoor climate.

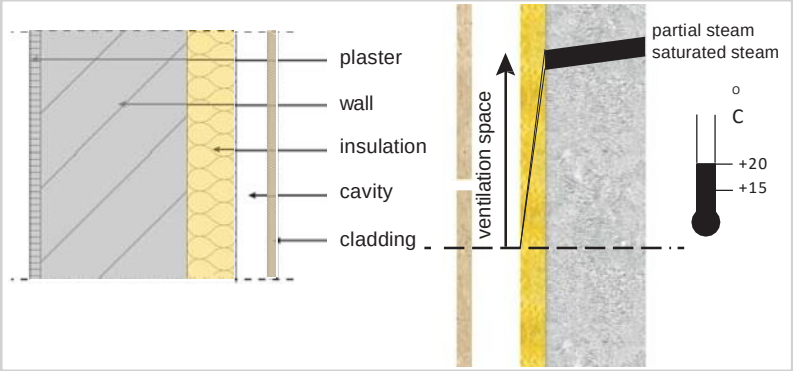

Insulation

The insulation components (thermal insulation, damp proofing, sound insulation and fire protection) and the cladding (weather protection) are structurally separate in the ventilated rainscreen system.

Due to the free selection of system components for rear-ventilated facades, the fire protection requirements »non-inflammable« or »hardly inflammable« can be met according to the country-specific building guidelines.

Rear-ventilated facades positively affect the sound insulating properties of the external wall. Depending on the thickness of the insulation, the dimensions of the cladding and the percentage of open joints, the sound reduction index can be increased by up to 14 dB.

Sub Channel Systems - Installation Details

HMPA-HC5 Sub channel system
Sub channel system with HMPA U channel assembled on HCSP05 channel supports and HCRS5 channel restraints. Stone installation can be made with either Z Anchors or HA L anchors. Fully adjustable with high load capacity.

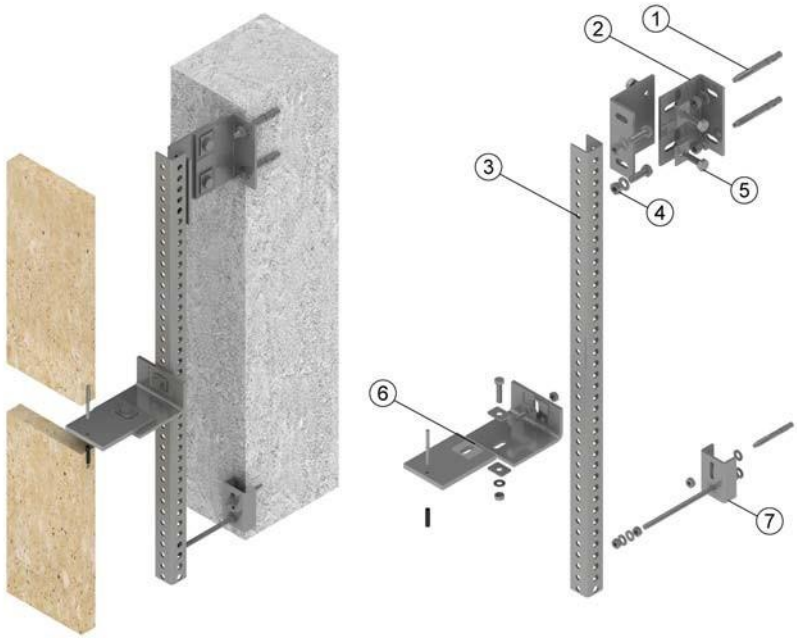

L Channel

1. Through Bolt
2. Channel Support (HC05)
3. Channel
4. Nut
5. Bolt
6. HA04 Anchor
7. Channel Restraint

ATS Sub channel fixing system
Sub channel system with HMPS toothed channel assembled on ATS-S channel supports and ATS-R channel restraints. Stone installation can be made with either Z Anchors or HA L anchors. Easy adjustability on the vertical axis alow quick installation of the brackets on to channels using lock nuts.

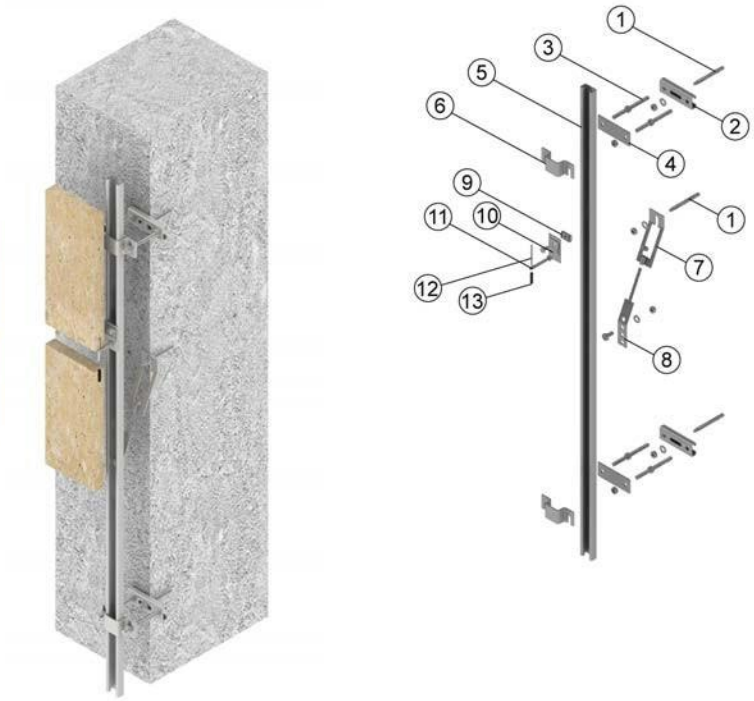

1. Through Bolt
2. HMPB Channel
3. Through Rod
4. Plate
5. HMPC Channel
6. Omega Anchor
7. HASP-1 Anchor
8. HASP-2 Anchor
9. Lock Nut
10. HZ02 F0 Anchor
11. Adjustable Arm
12. Flanged Pin
13. Plastic Tube

Sub Channel Systems - Installation Details

HMP-ALU-U Sub channel fixing system

Sub channel system with HMP-ALU-U aluminium channel assembled on HCSP4-ALU channel supports and HCRS4-ALU channel restraints. Stone installation can be made with either Z Anchors or Body anchors. Brackets are fixed on the channel with self tabbing screws, allowing qucik and easy installation.

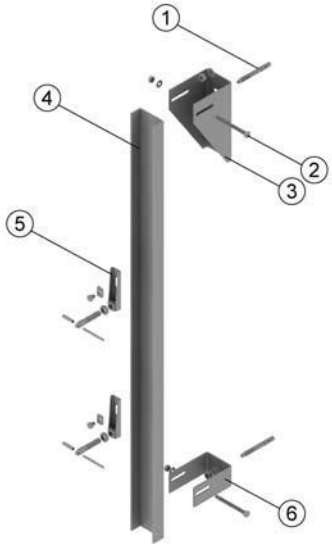

1. Through Bolt
2. Bolt
3. Channel Support
4. Channel
5. BA Body Anchor
6. Channel Restraint

HMP-ALU-AG Sub channel system

Sub channel system with Aluminium box channels forming a vertical and horizontal grid. Vertical channels are fixed on HCSP4-ALU Channel supports and the horizontal channels are set on the vertical channels with channel connection elements. Stone fixing is made on on to horizontal channels using the hang on method through the agraffe brackets that are fixed on the stone with undercut bolts.

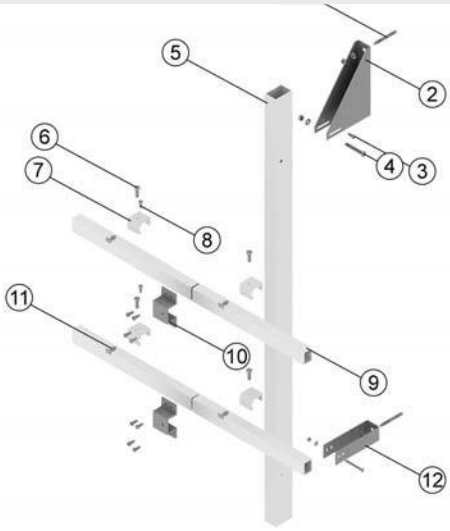

1. Through Bolt
2. Channel Support
3. Security Bolt
4. Bolt
5. Channel
6. Bolt
7. Bracket
8. Security Bolt
9. Channel
10. Channel Connection
11. Undercut Bolt
12. Channel Restraint

HMPA-HC5 Sub Channel System - Introduction

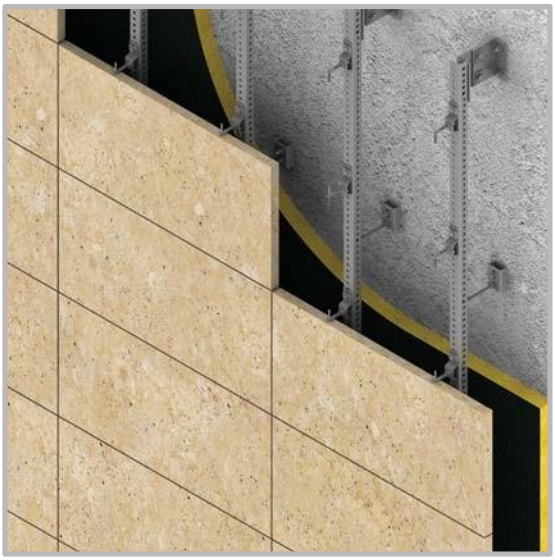

Easy to use Sub channel Fixing system for installation natural stone slabs on to building facades. Adjustability in three directions allowing fast production. Ability to absorb building movements.

HMPA U Channel

HCSP2 Channel support

HCRS2 Channel restraint

HZ02 Z Anchor

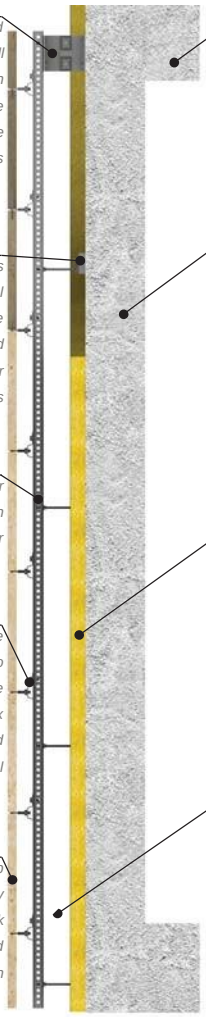

Channel support
Channel supports are load bearing brackets that bear the full weight of the cladding fixed on the sub channel systems. The load is transfered to the concrete beam and the attachment is made with anchor bolts.

Channel restraint
Channel restraints are brackets that restrain the sub channel system against wind pressure and suction. The brackets are tied to the wall with suitable anchor bolts, strengthening the channels against buckling.

Channel
Channels are spanned from floor slab to slab can be supplied in the same length as the floor height.

Z Anchors
Z Anchors are brackets that are used to install stone slabs on to the channels. The brackets are fixed to the channels with hex bolts. Each bracket is designed to carry the load of the individual stone panel.

Stone panel
Stone panels are fixed on to sub channel system. Proper study and calculation is made to check the suitability of stone and dimensions for facade installation purposes.

Load bearing beams
Load bearing beams are usually constructed out of high strength concrete. Sometimes steel is used. The Sub Channel system is loaded on this part of the substrate.

Building wall
The walls can be constructed out of concrete, brick, beton block or ytong. Different attachment types are used for different type of walls, therefore careful analysis must be made to use the most secure type of connections to the wall for restraining the sub channel system.

Insulation
A layer of thermal insulation is covered on the wall, with suitable dowels. Sound insulation, fire proof barriers and EPDM may also be laid behind and or infront of the thermal insulation, provinding full protection to the building.

Wall cavity
This is the empty space between the cladding and the insulation. Adequate space is required to accomodate the sub channel fixing system, allowing room for the channel and brackets to fit into.

HMPA-HC5 Sub Channel System - Technical Information

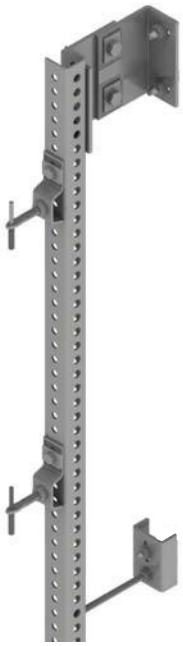

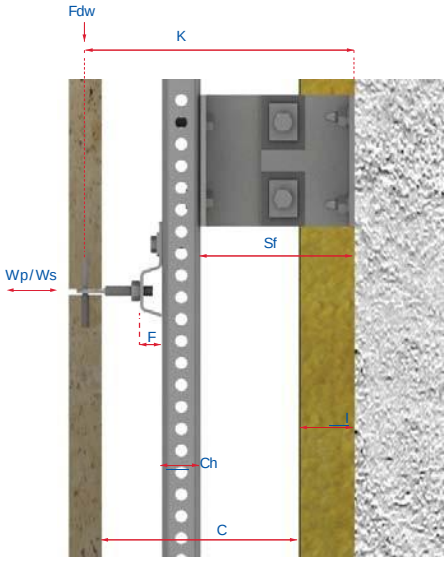

K: projection size
Fdw: dead Load
Ws: wind pressure
C: wall cavity
I: insulation thickness
CH: channel height

F: anchor forming size
Sf: support forming size
Lc: channel length
Sc: vertical channel spacing
Lk: end channel spacing
Ls: connection spacing

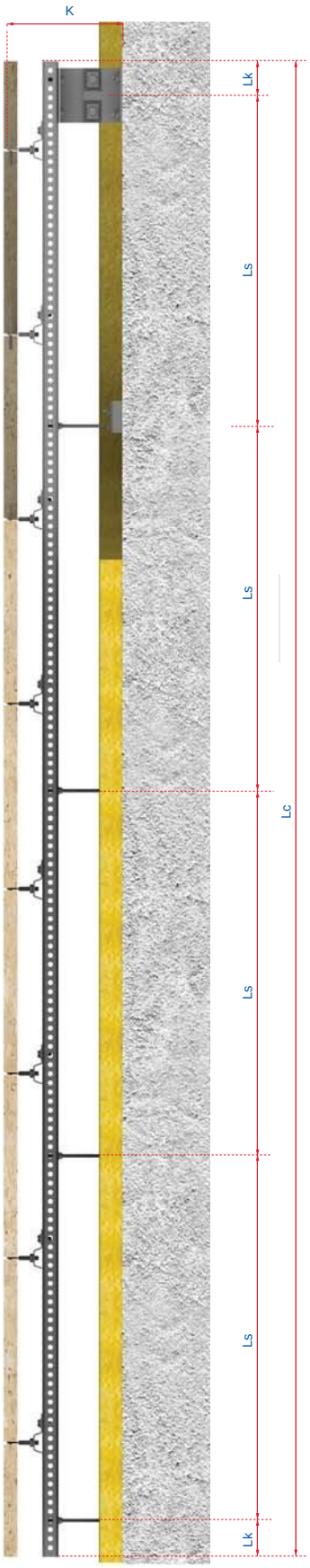

Proj. K (mm) +/- 20 mm	Channel height Ch (mm)	Support / Restrain Forming SF (mm)	Bracket offset size F (mm)	min. Cavity size C (mm)	min. Channel end spacing Lk (mm)	max channel spacing Ls (mm)
180	40	80	20	155	100	1000
200	40	80	40	175		
220	40	100	40	195		
240	40	120	40	215		
260	40	140	40	235		
280	40	160	40	255		
300	40	180	40	275		

- Maximum Dead Load 3.2 kN and Maximum Wind load Wp/Ws 2.6 kN
- Material: Stainless Steel 1.4301 (A2) & 1.4401 (A4) and Hot dip galvanized mild steel.
- Load capacity for wind loads and dead loads needs to be verified with stuctural calculations.

HMPA-HC2 Sub Channel System - Introduction

HMPA U Channel

HCSP2 Channel support

HCRS2 Channel restraint

HZ02 Z Anchor

HRS1 Restraint anchor

- Sub channel system with stainless steel or galvanized steel HMPA type U channels and HCSP supports
- High load bearing channel systems
- Adjustability in all directions up to +/- 30 mm
- Projection sizes minimum 90 mm maximum 360 mm
- Ideal for heavy loads and large projection sizes
- Stainless steel HZ02 Z anchors are fixed to channels with hex bolts.
- Installation in vertical and horizontal joints

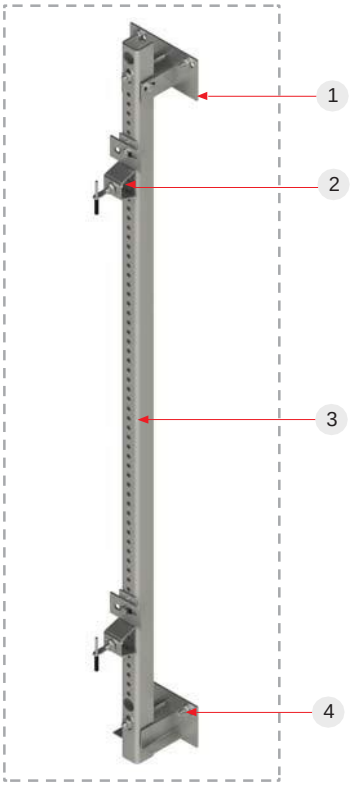

① Channel support
② HZ Z Anchor
③ U Channel
④ Channel restraint

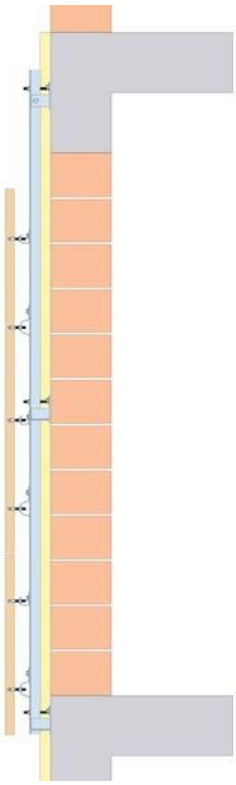

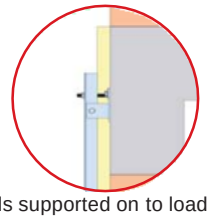

Channels supported on to load bearing concrete beams with HCSP2 channel supports using anchor bolts

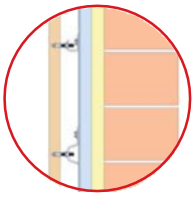

Stone installation is made with HZ02 & HRS1 Anchors on to channels with hex bolts

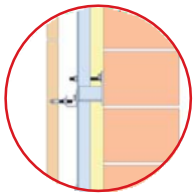

Channels are tied on to walls with HCRS2 Channel restraints to eliminate deflection

HMPB-HC1 Sub Channel System - Introduction

HMPB C Channel

HCSP1 Channel Support

HCRS1 Channel Restraint

HZ02 Anchor

- Sub channel system with stainless steel or galvanized steel HMPB C channels and HCSP1 supports
- Easy to assemble channel system with no complicated set elements
- Projection sizes minimum 100 mm maximum 250 mm
- Ideal for facade restorations
- Stainless steel HZ02 Z Anchors are fixed to channels with hex bolts
- Installation in vertical and horizontal joints

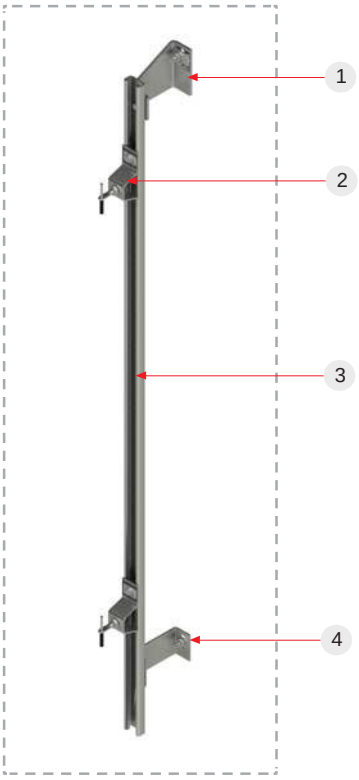

1. Channel support
2. HZ Z Anchor
3. C channel
4. Channel restraint

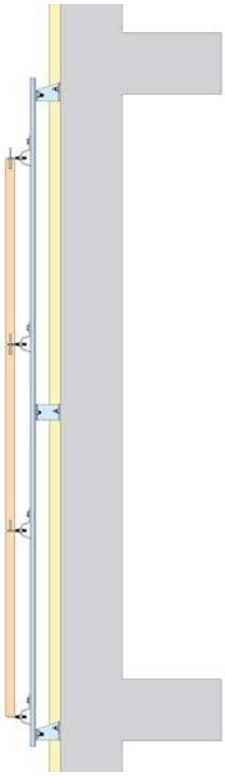

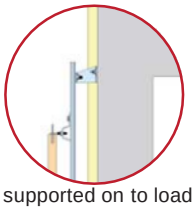

Channels supported on to load bearing beams with HCSP1 channel supports using expansion bolts

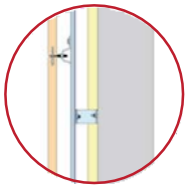

Stone installation is made with HZ02 Anchors on to channels with hex bolts

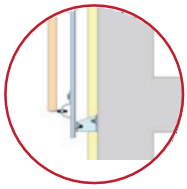

Channels are tied on to walls with HCRS2 Channel restraints to eliminate deflection

ATS Sub Channel System - Introduction

HMPS Toothed C Channel

ATS-S Channel Support

ATS-R Channel Restraint

HZ00 Z Anchor

- Sub channel system with stainless steel or galvanized steel HMPS toothed C channels and ATS supports
- Fast and easy fixing of stone panels
- Projection sizes minimum 160 mm maximum 360 mm
- Ideal for varying projection sizes and stone panel dimensions
- Stainless steel HZ00 Anchors are fixed to channels with hex bolts and lock nuts
- Installation in vertical and horizontal joints

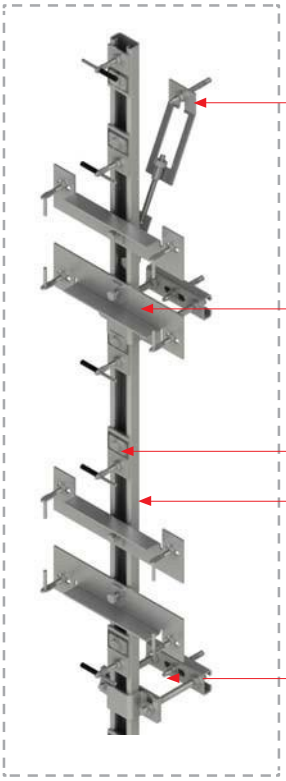

①Channel support
②HZ Z Anchor
③C channel
④Channel restraint

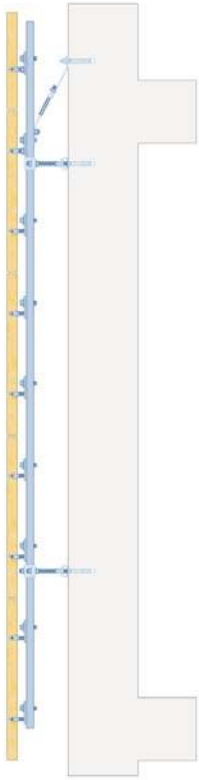

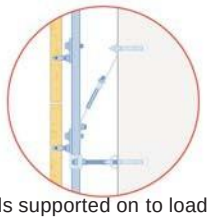

Channels supported on to load bearing beams with ATS-S channel supports using expansion bolts

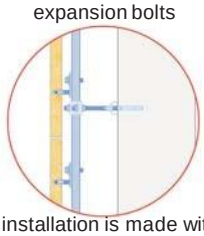

Stone installation is made with HZ00 Anchors on to channels with hex bolts and lock nuts

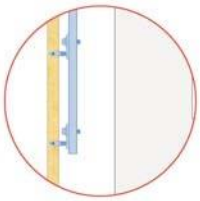

Channels are tied on to walls with ATS-R Channel restraints to eliminate deflection

HMPC-HC1/H Sub Channel System - Introduction

HMPC-41/41
C Channel

HMPC-41/21
C Channel

HCSP1 Channel Support

HCRS1 Channel Restraint

- Sub channel system with stainless steel or galvanized steel Vertical and Horizontal HMPC C channels and HCSP1 supports
- Quick adjustability at horizontal axis
- Projection sizes minimum 150 mm maximum 300 mm
- Ideal for staggered patterned facades
- Stainless Steel HZ01 Z anchors are fixed to channels with hex bolts and lock nuts
- Installation at horizontal joints

HCC-J Channel Connection

HZ01 Z Anchor

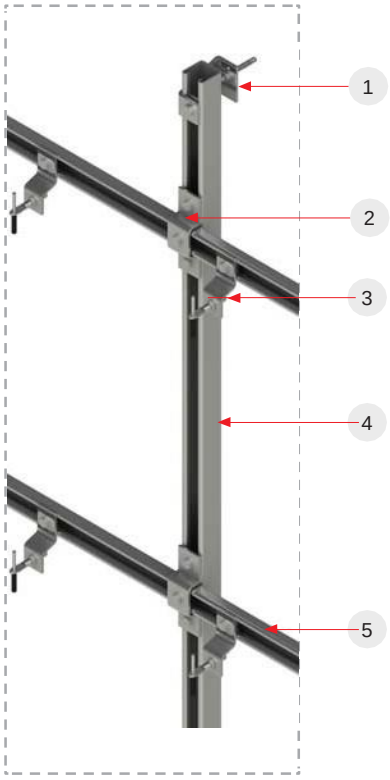

① Channel support
② Channel connection
③ Z Anchor
④ Vertical C Channel
⑤ Horizontal C Channel

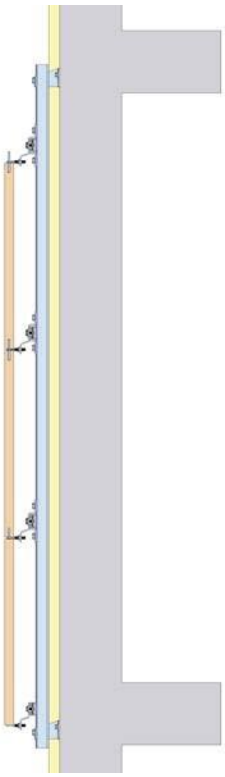

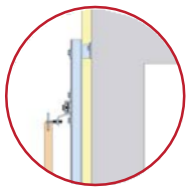

Vertical channels supported on to load bearing beams with HCSP1 channel supports using expansion bolts

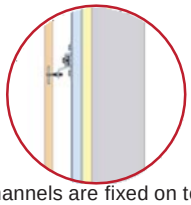

Horizontal c channels are fixed on to the vertical channels with HCC channel connections with lock nuts and hex. screws

Stone installation is made with HZ01 Anchors on to channels with lock nuts hex bolts

HMPA-HC3 Sub Channel System - Introduction

HMPA U Channel

HCRS3 Channel Support

HCRS3 Channel Restraint

HZ02 Z Anchor

- Sub channel system with stainless steel or galvanized HMPA U channels and HCSP3 supports
- Fast and easy installation
- Adjustability in all directions up to 30 mm
- Projection sizes minimum 80 mm maximum 250 mm
- HZ02 Z anchors are fixed to channels with hex bolts and lock nuts
- Installation at horizontal & vertical joints

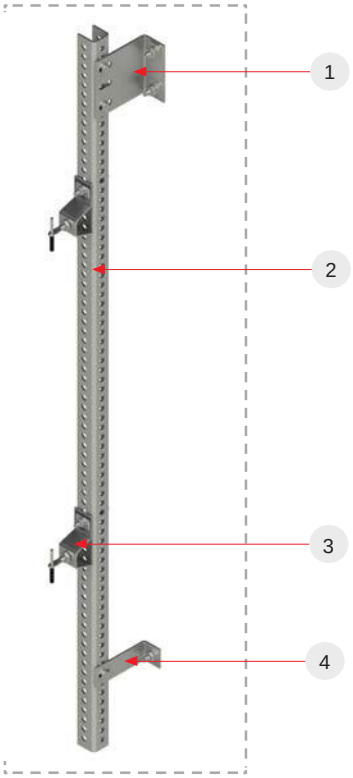

① Channel support
② U Channel
③ Z Anchor
④ Channel support

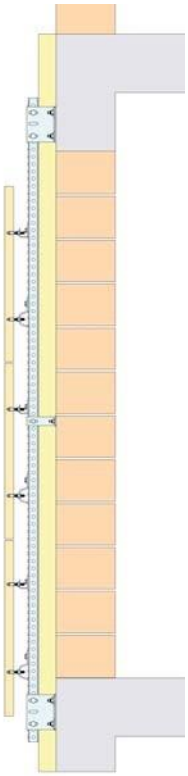

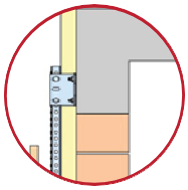

HMPA U Channels supported on to load bearing concrete beams with HCSP3 channel supports using anchor bolts

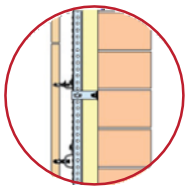

Stone installation is made with HZ02 & HRS1 Anchors on to channels with hex bolts

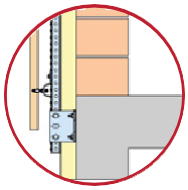

Channels are tied on to walls with HCRS3 Channel restraints to eliminate deflection

HMPA-HC1/H Sub Channel System - Introduction

HMPA Vertical U Channel

HMPA Horizontal U Channel

HCSP1 Channel Support

HCRS1 Channel Restraint

HZ02 Z Anchor

- Sub channel system with vertical and horizontal stainless steel or galvanized steel HMPA U channels and HCSP1 supports
- Quick adjustability at horizontal axis.
- Ideal for staggered patterned facades.
- Projection sizes minimum 150 mm maximum 300 mm
- HZ02 Z anchors are fixed to channels with hex bolts
- Installation at horizontal joints

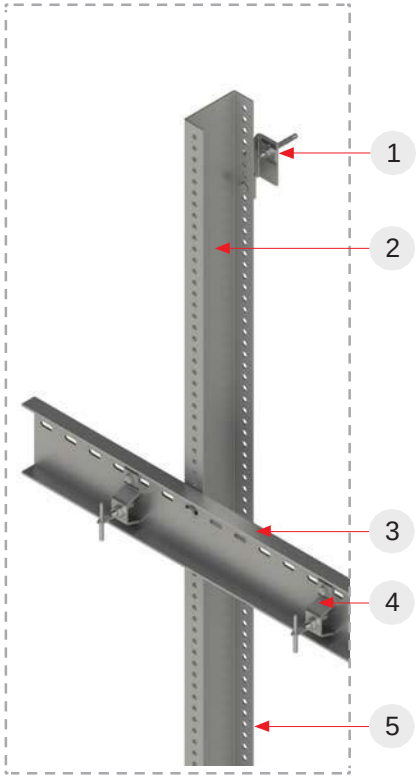

① Channel support
② Vertical U channel
③ Horizontal U Cha
④ Z Anchor nr
⑤ Channel restraint

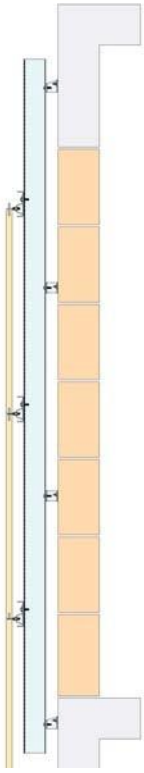

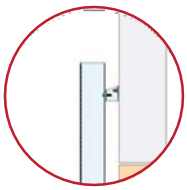

Vertical channels supported on to load bearing beams with HCSP1 channel supports using expansion bolts

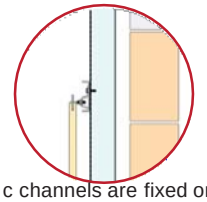

Horizontal c channels are fixed on to the vertical channels with HCC channel connections with lock nuts and hex. screws

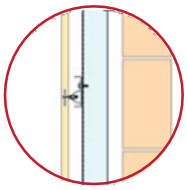

Stone installation is made with HZ01 Anchors on to channels with lock nuts hex bolts

HMP-ALU-P/L Sub Channel System - Introduction

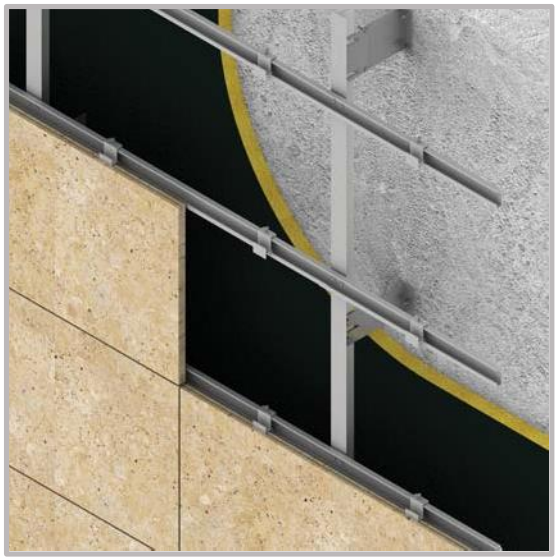

Easy to use Sub channel Fixing system for installation natural stone slabs on to building facades. Adjustability in three directions allowing fast production. Ability to absorb building movements.

HMP-ALU-T T Channel

HMP-ALU-P Agraffe channel

HCSP3-ALU Channel restraint

HCRS4-ALU Channel restraint

HM-AG-K Agraffe bracket

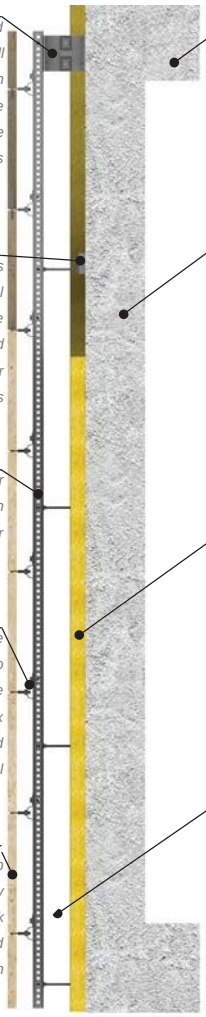

Channel support
Channel supports are load bearing brackets that bear the full weight of the cladding fixed on the sub channel systems. The load is transfered to the concrete beam and the attachment is made with anchor bolts.

Channel restraint
Channel restraints are brackets that restrain the sub channel system against wind pressure and suction. The brackets are tied to the wall with suitable anchor bolts, strengthening the channels against buckling.

Channel
Channels are spanned from floor slab to slab can be supplied in the same length as the floor height.

Z Anchors
Z Anchors are brackets that are used to install stone slabs on to the channels. The brackets are fixed to the channels with hex bolts. Each bracket is designed to carry the load of the individual stone panel.

Stone panel
Stone panels are fixed on to sub channel system. Proper study and calculation is made to check the suitability of stone and dimensions for facade installation purposes.

Load bearing beams
Load bearing beams are usually constructed out of high strength concrete. Sometimes steel is used. The Sub Channel system is loaded on this part of the substrate.

Building wall
The walls can be constructed out of concrete, brick, beton block or ytong. Different attachment types are used for different type of walls, therefore careful analysis must be made to use the most secure type of connections to the wall for restraining the sub channel system.

Insulation
A layer of thermal insulation is covered on the wall, with suitable dowels. Sound insulation, fire proof barriers and EPDM may also be laid behind and or infront of the thermal insulation, providing full protection to the building.

Wall cavity
This is the empty space between the cladding and the insulation. Adequate space is required to accomodate the sub channel fixing system, allowing room for the channel and brackets to fit into.

HMP-ALU-P/L Sub Channel System - Technical Information

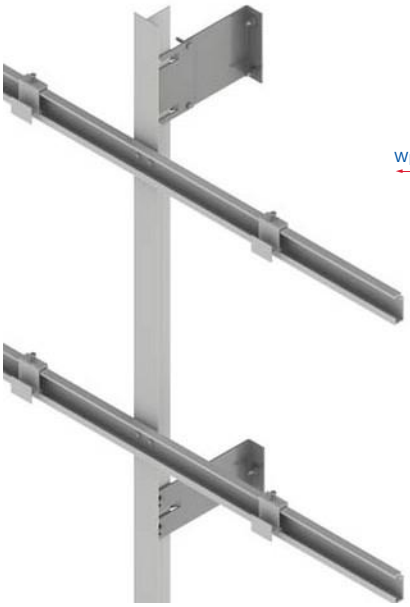

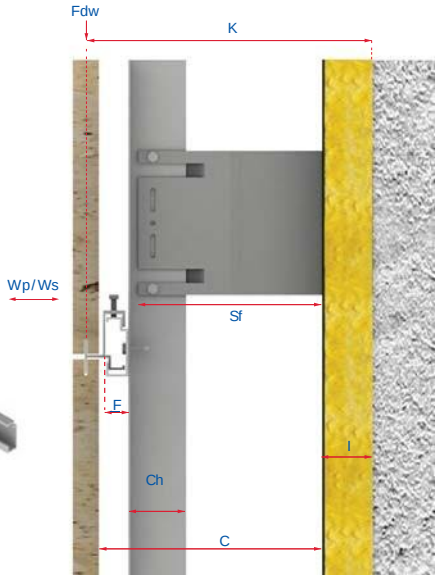

K: projection size
Fdw: dead Load
Ws: wind pressure
C: wall cavity
I: insulation thickness
CH: channel height

F: anchor forming size
Sf: support forming size
Lc: channel length
Sc: vertical channel spacing
Lk: end channel spacing
Ls: connection spacing

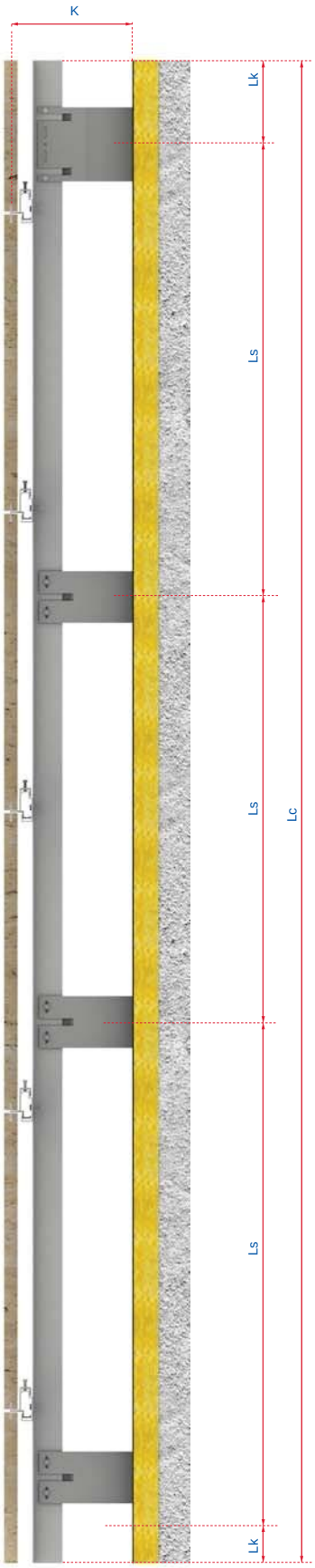

Projection K (mm) +/- 30 mm	Channel height Ch (mm)	Support/ restraint offset size Gf (mm)	Bracket offset size F (mm)	min. cavity size C (mm)	min Channel end spacing Lk (mm)	min channel spacing Ls (mm)
100	35	70	20	80	100	100
120	35	90	20	80	120	120
140	35	110	20	80	140	140
160	40	130	20	90	160	160
180	40	150	20	90	180	180
210	40	170	40	100	210	210
240	40	290	40	100	240	240
270	50	210	40	110	270	270
300	50	230	40	110	300	300

HMP-ALU-U Sub Channel System - Introduction

HMP-ALU-U Channel

HCSP4-AL Channel Support

HCRS4-AL Channel Restraint

BA Body anchor

- Sub channel system with Extruded Aluminium HMP-ALU-U U channels and stainless steel HCSP4-AL supports
- Fast and easy installation
- Adjustability in all directions up to 30 mm
- Projection sizes minimum 80 mm maximum 360 mm
- Stainless steel BA body anchors are fixed to channels with self tabbing
- Installation at horizontal & vertical joints

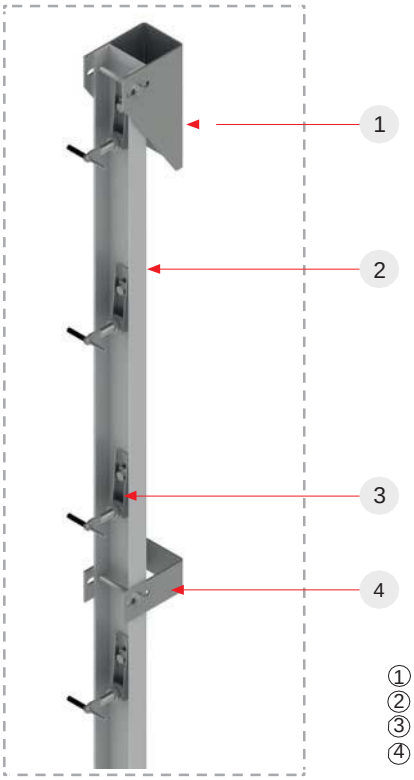

① Channel support
② Vertical U Channel
③ Body Anchor
④ Z Anchor

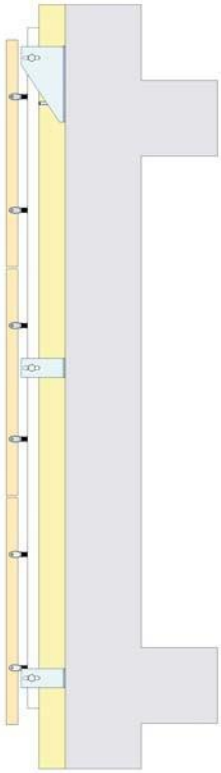

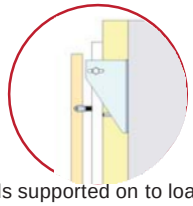

Channels supported on to load bearing concrete beams with HCSP4 channel supports using anchor bolts

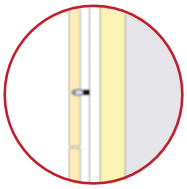

Stone installation is made with BA Body Anchors on to channels with self tabbing screws

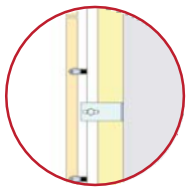

Channels are tied on to walls with HCRS4 Channel restraints to eliminate deflection

HMP-ALU-P Sub Channel System - Introduction

- Sub channel system with extruded aluminium vertical HMP-T-ALU & Horizontal HMP-ALU-P channels and stainless steel HCRS3-AL supports
- Fast and easy installation using hang on method
- Quick adjustability along the horizontal axis
- Projection sizes minimum 80 mm maximum 250 mm
- HM-AG/P aluminium brackets are used for fixing with the hang on method
- Installation at horizontal & vertical joints

HMP-ALU-T T shaped Channel

HMP-ALU-P Slot Channel

HCSP3-AL Channel Support

HM-AG-P Slot Bracket

HCRS3-AL Channel Restraint

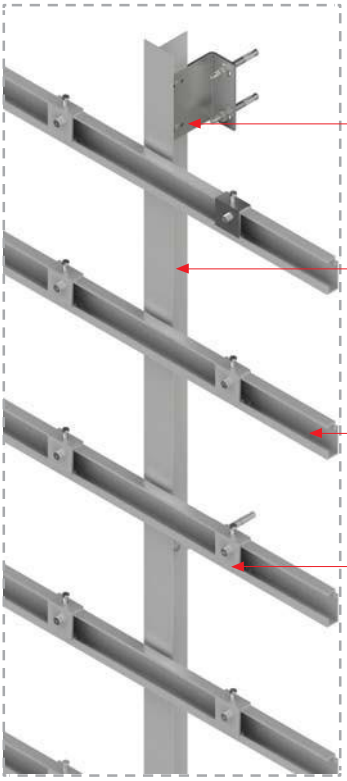

① Channel support
② Vertical T channel
③ Horizontal slot channel
④ Bracket with undercut

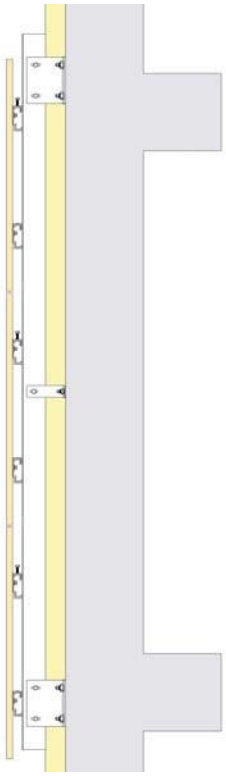

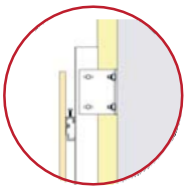

Vertical channels supported on to load bearing beams with HCSP3 channel supports using expansion bolts

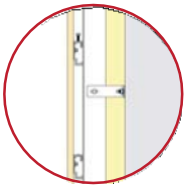

Horizontal c channels are fixed on to the vertical channels with self tabbing screws

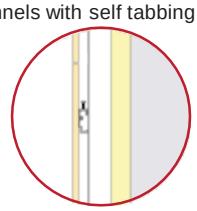

Stone installation is made with Agraffe aluminium brackets with hang on method on to the horizontal channels

HMP-ALU-SP Sub Channel System - Introduction

HMP-ALU-SP Channel

HCSP6-AL Channel support

HCRS3-AL Channel restraint

HZ02-SP Speedfix Z anchor

- Sub channel system with extruded aluminium HMP-ALU-R slot channels and stainless steel HCRS3-AL supports
- Fast and easy installation
- Quick adjustability along the vertical axis
- Projection sizes minimum 80 mm maximum 250 mm
- HZ02-SP stainless steel brackets are used to fix stone panels with self tabbing screws
- Installation at horizontal & vertical joints

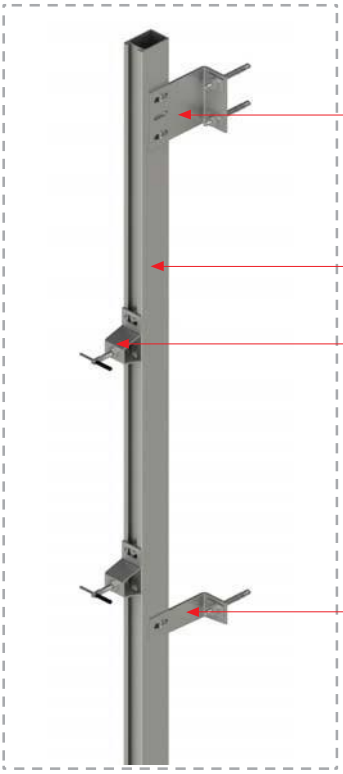

① Channel support
② Aluminium c-channel
③ Speedfix anchor
④ Channel restraint

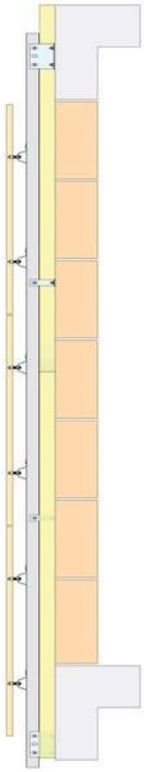

HMP-ALU-R Aluminium Slot Channels supported on to load bearing concrete beams with HCSP6 channel supports using anchor bolts

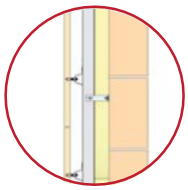

Stone installation is made with HZ02 & HRS1 Anchors on to channels with hex bolts

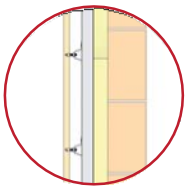

Channels are tied on to walls with HCRS3 Channel restraints to eliminate deflection

HMP-ALU-SP/H Sub Channel System - Introduction

HMP-ALU-B Channel

HMP-ALU-R Channel

HCSP4-AL Channel Support

HCRS4-AL Channel Retsraint

HCC-ALU-J Channel Connection

HZ02-SP Speedfix Z Anchor

•Sub channel system with extruded vertical aluminium HMP-ALU-B & horizontal HMP-ALU-R channels with stainless steel HCRS4-AL supports

- Fast and easy installation
- Quick adjustability along the horizontal axis
- Projection sizes minimum 80 mm maximum 250 mm
- HZ02 Z Anchor in stainless steel are used for fixing with self tabbing screws
- Installation at horizontal & vertical joints

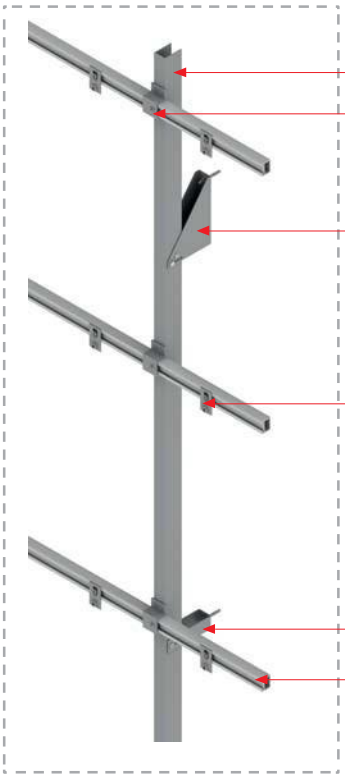

① Channel support
② U Channel
③ Z Anchor
④ Channel support
⑤ Channel support
⑥ Channel support

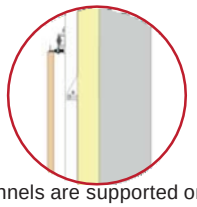

Vertical channels are supported on to load bearing beams with HCSP5 channel supports using expansion bolts

Horizontal channels are fixed on to the vertical channels with HCC channel connections. Stone slabs are fixed with kerf angles

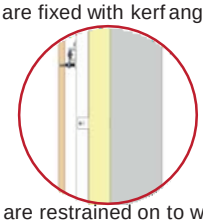

Channels are restrained on to walls with HCRS5 channel restraints to eliminate deflection

HMP-ALU-AG Sub Channel System - Introduction

HMP-ALU-B Channel

HMP-ALU-R Channel

HCSP4-AL Channel Support

HCRS4-AL Channel Restraint

HCC-ALU-J Channel Connection

HM-AG Agraffe Bracket

•Sub channel system with extruded vertical aluminium HMP-ALU-B & horizontal HMP-ALU-R channels with stainless steel HCRS4-AL supports

•Fast and easy installation

• Quick adjustability along the horizontal axis

•Projection sizes minimum 80 mm maximum 360 mm

•HM-AG aluminium brackets are used for fixing with the hang on method

• Installation at horizontal & vertical joints

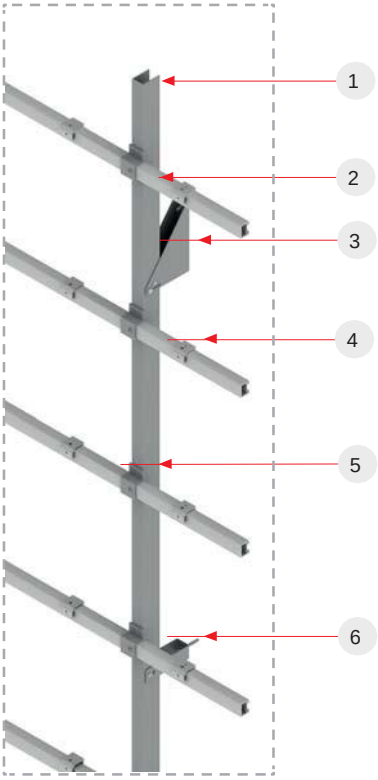

① Vertical aluminium channel
② Horizontal Aluminium channel
③ Channel support
④ Agraffe aluminium bracket
⑤ Channel connection bracket
⑥ Channel restraint

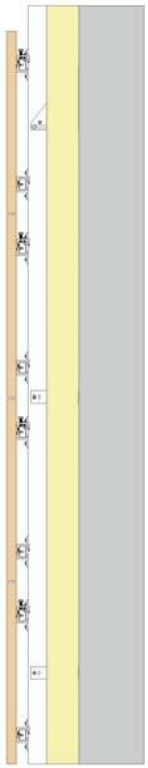

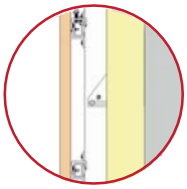

Vertical channels are supported on to load bearing beams with HCSP5 channel supports using expansion bolts

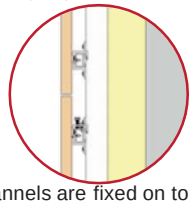

Horizontal channels are fixed on to the vertical channels with HCC channel connections.

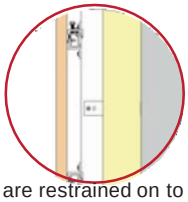

Channels are restrained on to walls with HCRS5 Channel restraints to eliminate deflection

HMP-ALU-P/L Sub Channel System - Introduction

HMP-ALU-B Channel

HMP-ALU-R Channel

HCSP-05 Channel support

HCRS-05 Channel restraint

HCC-ALU-J Channel connection

HZ02-SP Speedfix Z anchor

•Sub channel system with Aluminium HMP-ALU-B vertical box channel & HMP-ALU-R slot channels for stone panel installation

•Fast and easy installation

• Qucik adjustability along the vertical axis

• Projection sizes minium 80 mm maximum 360 mm

•HZ00 Z Anchor ins stainless steel using self tabbing screws

• Installation at horizontal joints

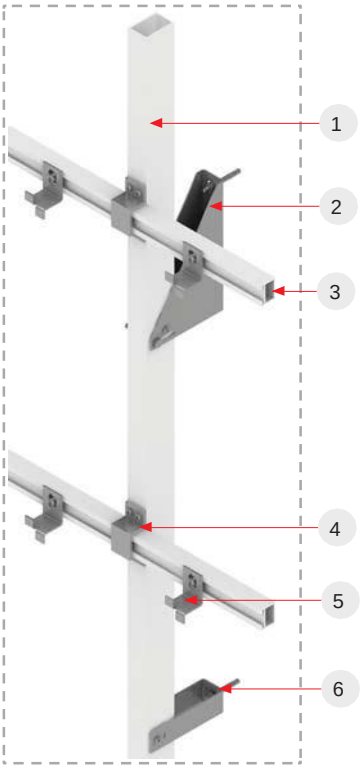

① Vertical channel
② Channel support
③ Horizontal Channel
④ Channel connection
⑤ Kerf angle
⑥ Channel restraint

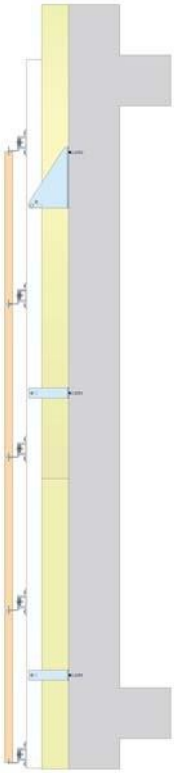

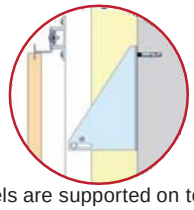

Vertical channels are supported on to load bearing beams with HCSP5 channel supports using expansion bolts

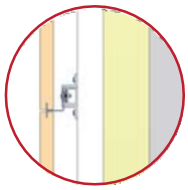

Horizontal channels are fixed on to the vertical channels with HCC channel connections. Stone slabs are fixed with kerf angles

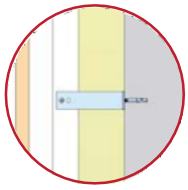

Channels are restrained on to walls with HCRS5 Channel restraints to eleminate deflection

Steel Channels - Technical details

HMPA U Channel

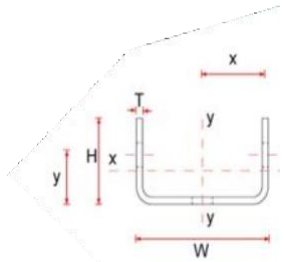

Product Code	Technical Details								
	Dimensions			X-X Axis			Y-Y Axis		
	Thickness T (mm)	Width W (mm)	Height H (mm)	IXX (cm^4)	ZX (cm^3)	X (mm)	IYY (cm^4)	ZY (cm^3)	Y (mm)
HMPA-2.5-40/30	2.50	40.00	30.00	1.57	0.74	20.00	4.21	2.11	8.80
HMPA-2.5-40/40	2.50	40.00	40.00	3.91	1.50	20.00	5.97	2.99	13.84
HMPA-3-35/35	3.00	35.00	35.00	2.83	1.24	17.50	4.27	2.44	12.14
HMPA-3-40/30	3.00	40.00	30.00	1.79	0.85	20.00	4.86	2.43	8.83
HMPA-3-40/40	3.00	40.00	40.00	4.55	1.74	20.00	6.92	3.46	13.93
HMPA-3-50/50	3.00	50.00	50.00	9.68	2.97	25.00	15.04	6.01	17.42
HMPA-4-40/40	4.00	40.00	40.00	5.67	2.19	20.00	8.60	4.30	14.10
HMPA-4-50/50	4.00	50.00	50.00	12.33	3.81	25.00	18.97	7.60	17.65
HMPA-5-50/50	5.00	50.00	50.00	14.68	4.57	25.00	22.40	8.97	17.87

HMPB C Channel

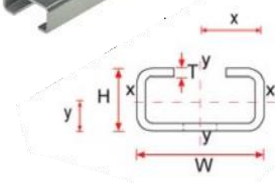

Product Code	Technical Details								
	Dimensions			X-X Axis			Y-Y Axis		
	Thickness T (mm)	Width W (mm)	Height H (mm)	IXX (cm^4)	ZX (cm^3)	X (mm)	IYY (cm^4)	ZY (cm^3)	Y (mm)
HMPB-2.5-28/15	2.50	28.00	15.00	0.33	0.43	14.00	1.43	1.02	7.38
HMPB-3-38/17	3.00	38.00	17.00	0.76	0.82	19.00	4.59	2.42	7.79
HMPB-2.5-41/21	2.50	41.00	21.00	1.32	1.19	20.50	5.71	2.79	9.85
HMPB-3-41/21	3.00	41.00	21.00	1.48	1.33	20.50	6.55	3.19	9.86

HMPC C Channel

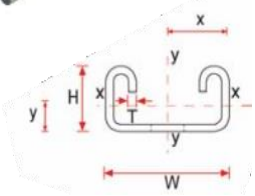

Product Code	Technical Details								
	Dimensions			X-X Axis			Y-Y Axis		
	Thickness T (mm)	Width W (mm)	Height H (mm)	IXX (cm^4)	ZX (cm^3)	X (mm)	IYY (cm^4)	ZY (cm^3)	Y (mm)
HMPC-2.5-41/22	2.50	41.00	22.00	1.25	0.99	20.50	5.60	2.72	8.16
HMPC-2.5-41/41	2.50	41.00	41.00	7.92	3.62	20.50	9.40	4.58	19.02
HMPC-3-41/22	3.00	41.00	22.00	1.69	1.43	20.50	6.94	3.40	9.16
HMPC-3-41/41	3.00	41.00	41.00	9.40	4.20	20.50	11.30	5.50	18.80

- Material: Stainless Steel 1.4301 (A2) & 1.4401 (A4) and Hot dip galvanized mild steel.
- Tables above is prepared according to values with Ø11 drilled holes.
- Channels can be provided up to 6 metres length.
- Load capacity for wind loads and dead loads needs to be verified with stuctural calculations.

Steel Channels - Technical Details

HMPS Serrated Channel

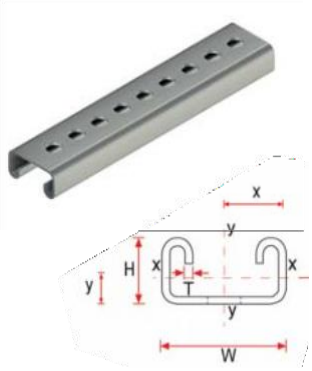

Product Code	Technical Details								
	Dimensions			X-X Axis			Y-Y Axis		
	Thickness T (mm)	Width W (mm)	Height H (mm)	IXX (cm⁴)	ZX (cm³)	X (mm)	IYY (cm⁴)	ZY (cm³)	Y (mm)
HMPS-2.5-41/22	2.50	41.00	22.00	1.25	0.99	20.50	5.60	2.72	8.16
HMPS-2.5-41/41	2.50	41.00	41.00	7.92	3.62	20.50	9.40	4.58	19.02
HMPS-3-41/22	3.00	41.00	22.00	1.69	1.43	20.50	6.94	3.40	9.16
HMPS-3-41/41	3.00	41.00	41.00	9.40	4.20	20.50	11.30	5.50	18.80

HMPL L Channel

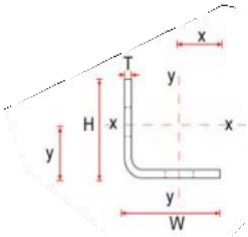

Product Code	Technical Details								
	Dimensions			X-X Axis			Y-Y Axis		
	Thickness T (mm)	Width W (mm)	Height H (mm)	IXX (cm⁴)	ZX (cm³)	X (mm)	IYY (cm⁴)	ZY (cm³)	Y (mm)
HMPL-2.5-30/30	2.50	30.00	30.00	0.93	0.44	21.22	0.93	0.44	8.78
HMPL-2.5-30/40	2.50	30.00	40.00	1.04	0.39	26.33	2.16	0.39	7.23
HMPL-3-30/30	3.00	30.00	30.00	1.09	0.52	20.79	1.09	0.52	9.21
HMPL-3-40/40	3.00	40.00	40.00	2.88	1.02	28.16	2.88	1.02	11.84
HMPL-3-50/50	3.00	50.00	50.00	6.04	1.69	35.72	6.04	1.69	14.28
HMPL-4-40/40	4.00	40.00	40.00	3.72	1.34	27.79	3.72	1.34	12.21
HMPL-50/50	4.00	50.00	50.00	7.85	2.22	35.40	7.85	2.22	14.60
HMPL-5-50/50	5.00	50.00	50.00	9.57	2.73	35.03	9.57	2.73	14.97

- Material: Stainless Steel 1.4301 (A2) & 1.4401 (A4) and Hot dip galvanized mild steel.
- Tables above is prepared according to values with Ø11 drilled holes.
- Channels can be provided up to 6 metres length.
- Load capacity for wind loads and dead loads needs to be verified with stuctural calculations.

Aluminium Channels - Technical Details

HMP-ALU-U U Type Channel

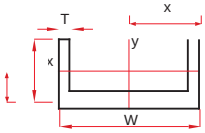

Product Code	Technical Details								
	Dimensions			X-X Axis			Y-Y Axis		
	Thickness T (mm)	Width W (mm)	Height H (mm)	IXX (cm^4)	ZX (cm^3)	X (mm)	IYY (cm^4)	ZY (cm^3)	Y (mm)
HMP-ALU-U-45/32	3	45	35	4.08	3.46	22.50	10.76	4.78	11.78
HMP-ALU-U-50/37	4	50	40	7.86	5.69	25.00	19.44	7.77	13.80
HMP-ALU-U-60/42	5	60	45	14.07	9.16	30.00	39.33	13.11	15.36

HMP-ALU-BV Box Type Channel

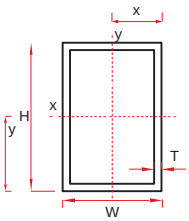

Product Code	Technical Details								
	Dimensions			X-X Axis			Y-Y Axis		
	Thickness T (mm)	Width W (mm)	Height H (mm)	IXX (cm^4)	ZX (cm^3)	X (mm)	IYY (cm^4)	ZY (cm^3)	Y (mm)
HML-ALU-BV-60/50	3	50	60	32.26	10.75	25.00	24.17	9.66	30.00
HML-ALU-BV-80/50	4	50	80	82.70	20.67	25.00	38.88	15.55	40.00
HML-ALU-BV-100/50	4	50	100	144.13	28.83	25.00	47.37	18.95	50.00
HML-ALU-BV-120/50	5	50	120	276.33	46.05	25.00	66.33	26.53	60.00

HMP-ALU-RL Slot Type Channel

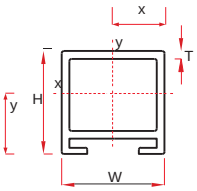

Product Code	Technical Details								
	Dimensions			X-X Axis			Y-Y Axis		
	Thickness T (mm)	Width W (mm)	Height H (mm)	IXX (cm^4)	ZX (cm^3)	X (mm)	IYY (cm^4)	ZY (cm^3)	Y (mm)
HMP-ALU-RL-30	3	40	30	4.44	2.89	20.00	8.78	4.39	15.33
HMP-ALU-RL-40	3	40	40	9.50	4.76	20.00	10.84	5.42	19.92
HMP-ALU-RL-80	3	40	60	27.08	9.22	20.00	14.95	7.47	29.36

- Material: Extruded Aluminyum Grade 6063 T66 mill finish and black anodised
- Tables above is prepared according to plain finish without drilled holes
- Channels can be provided up to 6 metres length.
- Load capacity for wind loads and dead loads needs to be verified with stuctural calculations.

Aluminium Channels - Technical Details

HMP-ALU-T T Type Channel

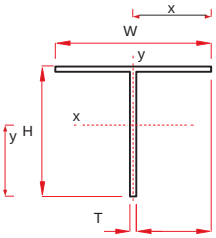

Product Code	Technical Details								
	Dimensions			X-X Axis			Y-Y Axis		
	Thickness T (mm)	Width W (mm)	Height H (mm)	IXX (cm^4)	ZX (cm^3)	X (mm)	IYY (cm^4)	ZY (cm^3)	Y (mm)
HMP-ALU-T-50/80	2.5	50	80	21.86	4.01	25.00	2.61	1.04	54.44
HMP-ALU-T-60/100	2.5	60	100	42.53	6.27	30.00	4.51	1.50	67.79
HMP-ALU-U-60/120	3	60	120	82.88	10.51	30.00	5.43	1.81	78.84

HMP-ALU-BH Box Type Channel

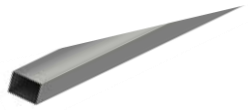

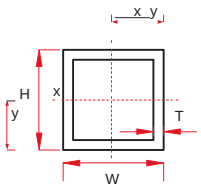

Product Code	Technical Details								
	Dimensions			X-X Axis			Y-Y Axis		
	Thickness T (mm)	Width W (mm)	Height H (mm)	IXX (cm^4)	ZX (cm^3)	X (mm)	IYY (cm^4)	ZY (cm^3)	Y (mm)
HMP-ALU-BH-40/30	3	40	30	5.08	3.38	20.00	8.14	4.07	15.00
HMP-ALU-BH-40/40	3	40	40	10.20	5.10	20.00	10.20	5.10	20.00
HMP-ALU-BH-40/60	4	40	60	34.50	11.50	20.00	17.80	8.90	30.00

HMP-ALU-P Slot Type Channel

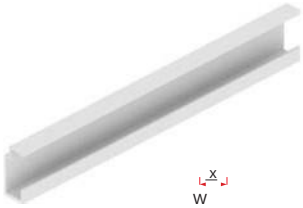

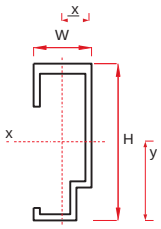

Product Code	Technical Details								
	Dimensions			X-X Axis			Y-Y Axis		
	Thickness T (mm)	Width W (mm)	Height H (mm)	IXX (cm^4)	ZX (cm^3)	X (mm)	IYY (cm^4)	ZY (cm^3)	Y (mm)
HMP-ALU-P-45/32	2.2	45	32	16.66	4.66	14.03	2.03	1.45	35.72

- Material: Extruded Aluminyum Grade 6063 T66 mill finish and black anodised
- Tables above is prepared according to plain finish without drilled holes
- Channels can be provided up to 6 metres length.
- Load capacity for wind loads and dead loads needs to be verified with stuctural calculations.

Channel Support for Steel Channels - Technical details

HCSP1 Channel Support

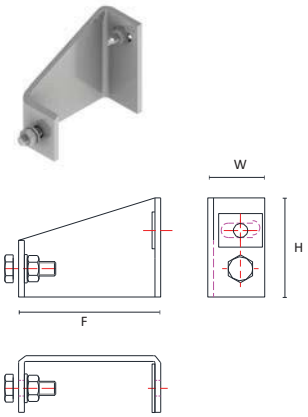

Product Code	Technical Details						
	Width	Height	Forming	Set Screw size	Expansion bolt	Maximum Dead Load	Maximum Windload
	W (mm)	H (mm)	F (mm)	(mm)	(mm)	(N)	(N)
HCSP1-40	40	80	40	M10x25	M10x90	3.000	2.200
HCSP1-60	40	90	60				
HCSP1-80	45	100	80				
HCSP1-100	45	100	100				
HCSP1-120	50	100	120				
HCSP1-140	50	100	140				
HCSP1-160	50	115	160				
HCSP1-180	55	115	180				
HCSP1-200	55	120	200				

• Suitable for all type of channels

HCSP2 Channel Support

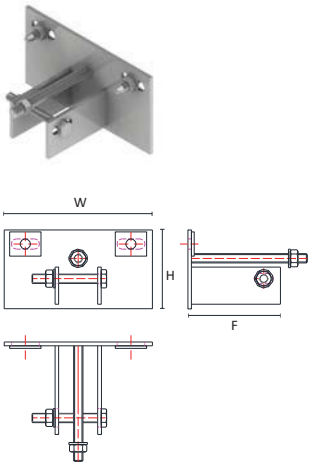

Product Code	Technical Details						
	Width	Height	Forming	Set Screw size	Expansion bolt	Maximum Dead Load	Maximum Windload
	W (mm)	H (mm)	F (mm)	(mm)	(mm)	(N)	(N)
HCSP2-100	160	85	100	M10x80	M10x90	3.500	2.200
HCSP2-120	160	85	120				
HCSP2-140	160	95	140				
HCSP2-160	160	95	160				
HCSP2-180	180	95	180				
HCSP2-210	180	95	210				
HCSP2-240	180	95	240				
HCSP2-270	180	100	270				
HCSP2-300	180	100	300				

• Suitable for HMPA U type channels

HCSP3 Channel Support

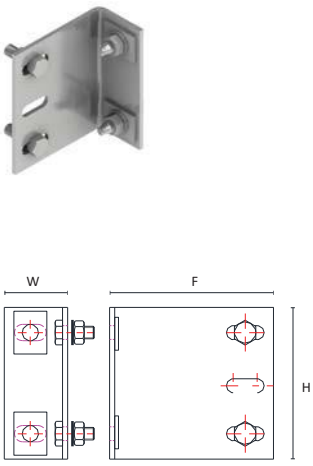

Product Code	Technical Details						
	Width	Height	Forming	Set Screw size	Expansion bolt	Maximum Dead Load	Maximum Windload
	W (mm)	H (mm)	F (mm)	(mm)	(mm)	(N)	(N)
HCSP3-70	50	120	70	M10x25	M10x90	2.500	1.500
HCSP3-90	50	120	90				
HCSP3-110	50	120	110				
HCSP3-130	50	120	130				
HCSP3-150	50	120	150				
HCSP3-170	50	120	170				
HCSP3-190	50	120	190				
HCSP3-210	60	120	210				
HCSP3-230	60	120	230				

• Suitable for HMPA U type channels

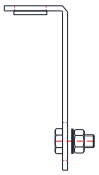

• Material: Stainless Steel 1.4301 (A2) & 1.4401 (A4) and Hot dip galvanized mild steel.
• Load capacity for wind loads and dead loads needs to be verified with stuctural calculations.

Channel Support for Steel Channels - Technical details

HCSP4 Channel Support

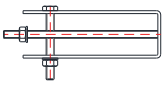

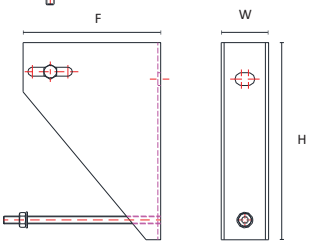

Product Code	Technical Details						
	Width	Height	Forming	Set Screw size	Expansion bolt	Maximum Dead Load	Maximum Wind load
	W (mm)	H (mm)	F (mm)	(mm)	(mm)	(N)	(N)
HCSP4-100	50	175	100	M12x80	M12x110	4.500	3.000
HCSP4-120	50	175	120				
HCSP4-140	50	175	140				
HCSP4-160	50	195	160				
HCSP4-180	50	195	180				
HCSP4-210	50	195	210				
HCSP4-240	50	195	240				
HCSP4-270	50	215	270				
HCSP4-300	50	215	300				

• Suitable for HMPA U type channels

HCSP5 Channel Support

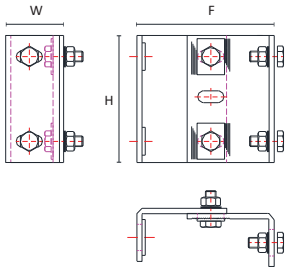

Product Code	Technical Details						
	Width	Height	Forming	Set Screw size	Expansion bolt	Maximum Dead Load	Maximum Wind load
	W (mm)	H (mm)	F (mm)	(mm)	(mm)	(N)	(N)
HCSP5-100	50	120	100	M10x25	M10x90	2.500	1.500
HCSP5-120	50	120	120				
HCSP5-140	50	120	140				
HCSP6-160	50	120	160				
HCSP5-180	50	120	180				
HCSP5-210	50	120	210				
HCSP5-240	50	120	240				
HCSP5-270	60	120	270				
HCSP5-300	60	120	300				

• Suitable for HMPA U & HMPS C type channels

ATS Channel Support

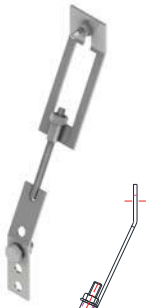

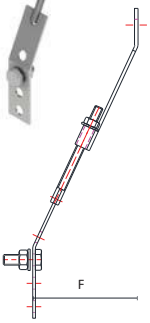

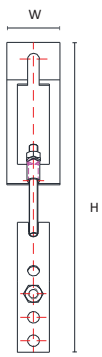

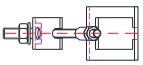

Product Code	Technical Details						
	Width	Height	Forming	Set Screw size	Expansion bolt	Maximum Dead Load	Maximum Wind load
	W (mm)	H (mm)	F (mm)	(mm)	(mm)	(N)	(N)
ATS-100	50	290	100	M12x40	M12x110	4.500	3.000
ATS-140	50	375	140				
ATS-180	50	460	180				
ATS-220	50	550	220				
ATS-260	50	635	260				
ATS-300	50	710	300				

• Suitable for HMPS C type channels

• Material: Stainless Steel 1.4301 (A2) & 1.4401 (A4) and Hot dip galvanized mild steel.
• Load capacity for wind loads and dead loads needs to be verified with stuctural calculations.

Channel Restraints for Steel Channels - Technical details

HCRS1 Channel Restraint

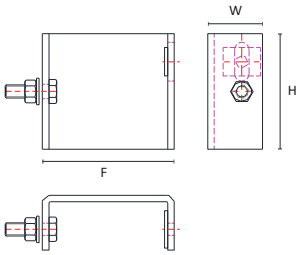

Product Code	Technical Details					
	Width	Height	Forming	Set Screw size	Expansion bolt	Maximum Wind Load
	W (mm)	H (mm)	F (mm)	(mm)	(mm)	(N)
HCRS1-40	40	60	40	M8x25	M8x80	2.200
HCRS1-60	40	60	60			
HCRS1-80	45	80	80			
HCRS1-100	45	80	100			
HCRS1-120	50	100	120			
HCRS1-140	50	100	140			
HCRS1-160	50	100	160			
HCRS1-180	50	100	180			
HCRS1-200	50	100	200			

• Suitable for all type of channels

HCRS2 Channel Restraint

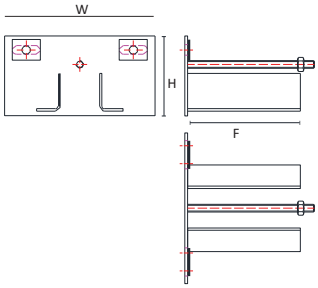

Product Code	Technical Details					
	Width	Height	Forming	Set Screw size	Expansion bolt	Maximum Wind Load
	W (mm)	H (mm)	F (mm)	(mm)	(mm)	(N)
HCRS2-100	160	85	100	M8x25	M8x80	2.200
HCRS2-120	160	85	120			
HCRS2-140	160	95	140			
HCRS2-160	160	95	160			
HCRS2-180	180	95	180			
HCRS2-210	180	95	210			
HCRS2-240	180	95	240			
HCRS2-270	180	100	270			
HCRS2-300	180	100	300			

• Suitable for HMPA U type channels

HCRS3 Channel Restraint

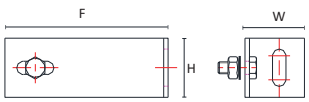

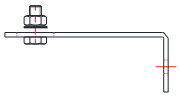

Product Code	Technical Details					
	Width	Height	Forming	Set Screw size	Expansion bolt	Maximum Wind Load
	W (mm)	H (mm)	F (mm)	(mm)	(mm)	(N)
HCRS3-70	40	50	70	M8x25	M8x80	2.200
HCRS3-90	40	50	90			
HCRS3-110	40	50	110			
HCRS3-130	40	50	130			
HCRS3-150	40	50	150			
HCRS3-170	40	50	170			
HCRS3-190	40	50	190			
HCRS3-210	40	50	210			
HCRS3-230	40	50	230			

• Suitable for HMPA U type channels

• Material: Stainless Steel 1.4301 (A2) & 1.4401 (A4) and Hot dip galvanized mild steel.
• Load capacity for wind loads and dead loads needs to be verified with stuctural calculations.

Channel Restraints for Steel Channels - Technical details

HCRS5 Channel Restraint

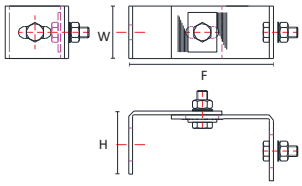

Product Code	Technical Details					
	Width	Height	Forming	Set Screwsize	Expansion bolt	Maximum Wind Load
	W (mm)	H (mm)	F (mm)	(mm)	(mm)	(N)
HCRS5-70	50	50	70	M8x80	M8x80	2.200
HCRS5-90	50	50	90			
HCRS5-110	50	50	110			
HCRS5-130	50	50	130			
HCRS5-150	50	50	150			
HCRS5-170	50	50	170			
HCRS5-190	50	50	190			
HCRS5-210	60	60	210			
HCRS5-230	60	60	230			

• Suitable for HMPA & HMPS type channels

ATS Channel Support

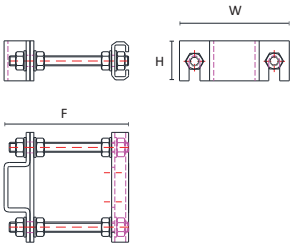

Product Code	Technical Details					
	Width	Height	Forming	Set Screwsize	Expansion bolt	Maximum Wind Load
	W (mm)	H (mm)	F (mm)	(mm)	(mm)	(N)
ATS-160				M8x80	M8x80	2.200
ATS-200						
ATS-240						
ATS-280						
ATS-320						
ATS-360						

• Suitable for HMPS type channels

HCRS Channel Restraint

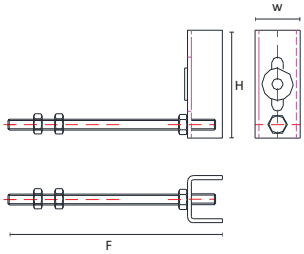

Product Code	Technical Details					
	Width	Height	Forming	Thread Metric	Expansion bolt	Maximum Wind Load
	W (mm)	H (mm)	F (mm)	(mm)	(mm)	(N)
HCRS-100	50	80	100	M8	M8x100	2.200
HCRS-120	50	80	120			
HCRS-140	50	80	140			
HCRS-160	50	80	160			
HCRS-180	50	80	180			
HCRS-210	50	80	210			
HCRS-240	50	80	240			
HCRS-270	50	80	270			
HCRS-300	50	80	300			

• Suitable for all type of channels

• Material: Stainless Steel 1.4301 (A2) & 1.4401 (A4) and Hot dip galvanized mild steel.
• Load capacity for wind loads and dead loads needs to be verified with stuctural calculations.

Channel Support for Aluminium Channels - Technical details

HCSP3-AL Channel Support

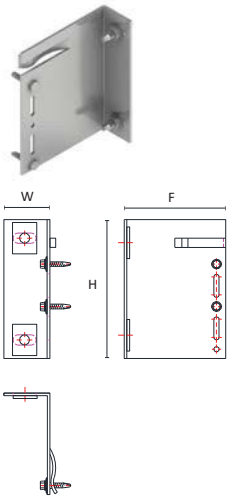

Product Code	Technical Details						
	Width	Height	Forming	Set tabbing screw	Expansion bolt	Maximum Dead Load	Maximum Windload
	W (mm)	H (mm)	F (mm)	(mm)	(mm)	(N)	(N)
HCSP3-AL-70	50	120	70	6.6 x 30	M10x90	2.000	1.200
HCSP3-AL-90	50	120	90				
HCSP3-AL-110	50	120	110				
HCSP3-AL-130	50	120	130				
HCSP3-AL-150	50	120	150				
HCSP3-AL-170	50	120	170				
HCSP3-AL-190	50	120	190				
HCSP3-AL-210	60	120	210				
HCSP3-AL-230	60	120	230				

• Suitable for HMP-ALU-T type channels

HCSP4-AL Channel Support

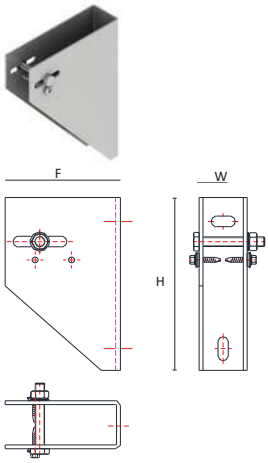

Product Code	Technical Details						
	Width	Height	Forming	Set Screwsize	Expansion bolt	Maximum Dead Load	Maximum Windload
	W (mm)	H (mm)	F (mm)	(mm)	(mm)	(N)	(N)
HCSP4-AL-100	50	175	100	M10x80	M10x90	4.500	3.000
HCSP4-AL-120	50	175	120				
HCSP4-AL-140	50	175	140				
HCSP4-AL-160	50	195	160				
HCSP4-AL-180	50	195	180				
HCSP4-AL-210	50	195	210				
HCSP4-AL-240	50	195	240				
HCSP4-AL-270	50	215	270				
HCSP4-AL-300	50	215	300				

• Suitable for HMP-ALU-U type channels

HCSP6-AL Channel Support

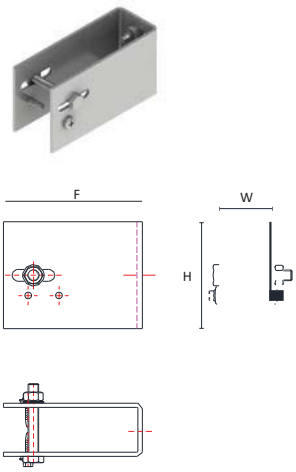

Product Code	Technical Details						
	Width	Height	Forming	Set Screwsize	Expansion bolt	Maximum Dead Load	Maximum Windload
	W (mm)	H (mm)	F (mm)	(mm)	(mm)	(N)	(N)
HCSP6-AL-70	40	120	70	M10x25	M10x90	3.000	2.200
HCSP6-AL-90	40	120	90				
HCSP6-AL-110	40	120	110				
HCSP6-AL-130	40	120	130				
HCSP6-AL-150	40	120	150				
HCSP6-AL-170	40	120	170				
HCSP6-AL-190	40	120	190				
HCSP6-AL-210	40	120	210				
HCSP6-AL-230	40	120	230				

• Suitable for HMP-ALU-RL U type channels

• Material: Stainless Steel 1.4301 (A2) & 1.4401 (A4) and Hot dip galvanized mild steel.
• Tables above is prepared according to values with Ø11 drilled holes.
• Channels can be provided up to 6 metres length.
• Load capacity for wind loads and dead loads needs to be verified with stuctural calculations.

Channel Restraints for Aluminium Channels - Technical details

HCRS3-AL Channel Restraint

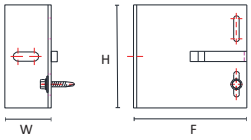

Product Code	Technical Details					
	Width	Height	Forming	Self Tabbing screw	Expansion bolt	Maximum Wind Load
	W (mm)	H (mm)	F (mm)	(mm)	(mm)	(N)
HCRS3-AL-70	40	80	70	6x30	M8x80	2.200
HCRS3-AL-90	40	80	90			
HCRS3-AL-110	40	80	110			
HCRS3-AL-130	40	80	130			
HCRS3-AL-150	40	80	150			
HCRS3-AL-170	40	80	170			
HCRS3-AL-190	40	80	190			
HCRS3-AL-210	40	80	210			
HCRS3-AL-230	40	80	230			

• Suitable for HMP-ALU-T type channels

HCRS4-AL Channel Restraint

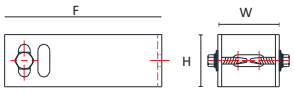

Product Code	Technical Details					
	Width	Height	Forming	Set Screw size	Expansion bolt	Maximum Wind Load
	W (mm)	H (mm)	F (mm)	(mm)	(mm)	(N)
HCRS4-ALU-100	50	80	100	M8x25	M8x80	2.200
HCRS4-ALU-120	50	80	120			
HCRS4-ALU-140	50	80	140			
HCRS4-ALU-160	50	80	160			
HCRS4-ALU-180	50	80	180			
HCRS4-ALU-210	50	80	210			
HCRS4-ALU-240	50	80	240			
HCRS4-ALU-270	50	80	270			
HCRS4-ALU-300	50	80	300			

• Suitable for HMP-ALU-U U type channels

HCRS6-L Channel Restraint

Product Code	Technical Details					
	Width	Height	Forming	Set Screw size	Expansion bolt	Maximum Wind Load
	W (mm)	H (mm)	F (mm)	(mm)	(mm)	(N)
HCRS6-ALU-70	40	50	70	M8x25	M8x80	2.200
HCRS6-ALU-90	40	50	90			
HCRS6-ALU-110	40	50	110			
HCRS6-ALU-130	40	50	130			
HCRS6-ALU-150	40	50	150			
HCRS6-ALU-170	40	50	170			
HCRS6-ALU-190	40	50	190			
HCRS6-ALU-210	40	50	210			
HCRS6-ALU-230	40	50	230			

• Suitable for HMP-ALU-RL type channels

• Material: Stainless Steel 1.4301 (A2) & 1.4401 (A4)
• More details availabel upon request

Anchors for Sub Channel Systems

Anchors for Steel Channel Systems

HZ02 Z Anchor Set

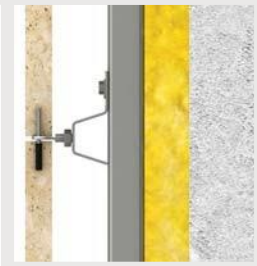

Dead Load Capacity: 400N
Wind Load Capacity: 316N

HRS01 Restraint Anchor Set

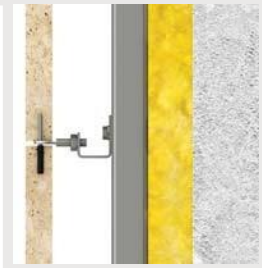

Wind Load Capacity: 316N

HZ01 Z Anchor Set

Dead Load Capacity: 400N
Wind Load Capacity: 316N

HZ00 Z Anchor Set

Dead Load Capacity: 400N
Wind Load Capacity: 316N

HZ02 Z Anchor Set

Dead Load Capacity: 400N
Wind Load Capacity: 316N

Anchors for Aluminium Channel Systems

HZ02-SPX Z Anchor Set

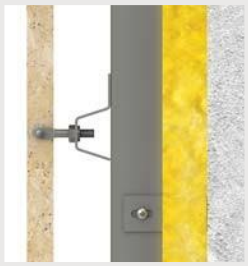

Dead Load Capacity: 400N
Wind Load Capacity: 316N

HZ00-SPX Z Anchor Set

Dead Load Capacity: 400N
Wind Load Capacity: 316N

HM-AG-G Agraffe Set

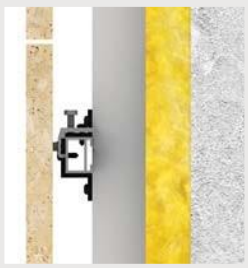

Dead Load Capacity: 400N
Wind Load Capacity: 316N

HM-AG-P Agraffe Set

Dead Load Capacity: 400N
Wind Load Capacity: 316N

HM-AG-K Agraffe Set

Dead Load Capacity: 400N
Wind Load Capacity: 316N

Stone Attachments - Information

Undercut system

a: Stone
b: Leveling bolt
c: Agraffe bracket
d: Undercut bolt
e: horizontal channel
f: cavity
g: channel connection
h: vertical channel

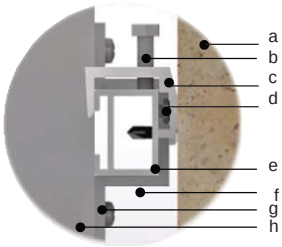

When designing undercut fixing systems, most often a grid of vertical and horizontal channels are used. Special brackets are attached on the back of the stone with undercut bolts. The special brackets are used to fix the stones on the horizontal channels with the hang on method.

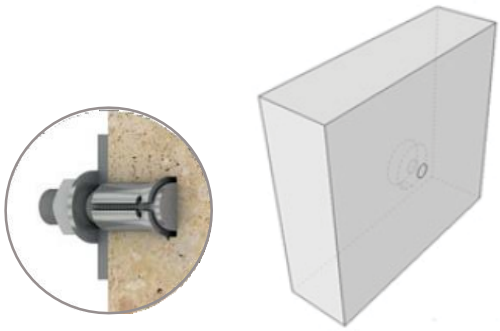

Pin System

a: load bearing wall
b: insulation
c: anchor bolt
d: z anchor set
e: flanged pin
f: adjustable arm
g: cavity
h: stone

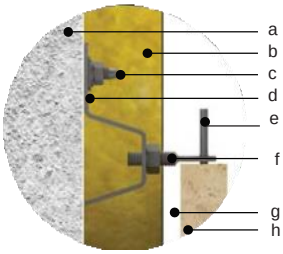

When designing fixing systems by using pin system, atachments to stone can be made at either horizontal or vertical joints. this is determined according to the pattern of the stone layout. Adjustable anchors are used and can be fixed directly to load bearing walls or fixed on channel systems.

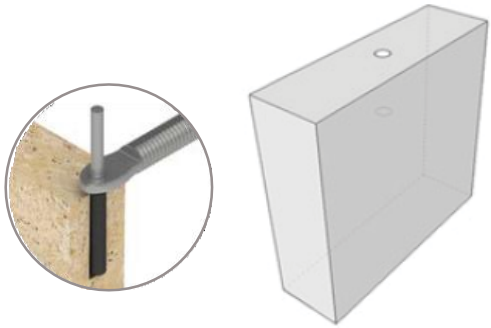

Undercut system

a: vertical channel
b: channel connection
c: horizontal channel
d: self tabbing screw
e: I anchor
f: kerf
g: cavity
h: stone

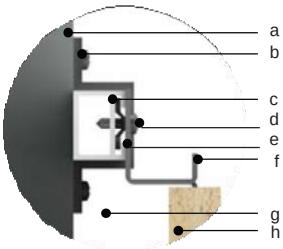

When designing fixing systems by using kerf system, atachments to stone can be made at horizontal joints only. Kerf anchors are used to installed the stone panels. Anchors can be fixed directly to wall or channel systems.

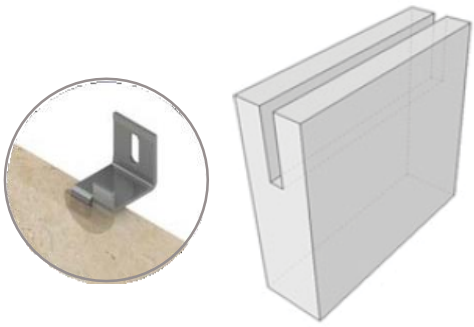

cortartec

www.cortartec.net

HB01 Sleeve bolt

Product code	Size M x L (mm)	Hole d_o / h_1 (mm)	Embed depth h_{ef} (mm)	Thread length f (mm)	max torque T_{in1} (Nm)	thick. T (mm)	hole d_o (mm)	Rec. tensile load N_{rec} (kN)	Rec. shear load V_{rec} (kN)
HB01-6/80	M6x80	8/55	45	27	7	10	7	2.50	0.84
HB01-8/80	M8x80	10/55	45	27	15	10	9	2.89	1.04
HB01-10/90	M10x90	12/65	55	25	30	10	11	3.00	1.24
HB01-12/100	M12x100	12/75	65	30	40	10	13	3.30	1.40

** Loads are for dense block walls*

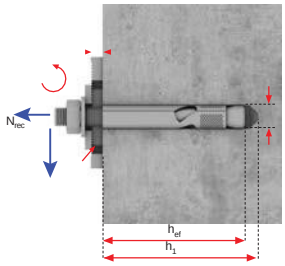

HB03 Through bolt

Product code	Size M x L (mm)	Hole d_o / h_1 (mm)	Embed depth h_{ef} (mm)	Thread length f (mm)	max torque T_{in1} (Nm)	thick. T (mm)	hole d_o (mm)	Rec. tensile load N_{rec} (kN)	Rec. shear load V_{rec} (kN)
HB03-8/80	M8x80	8/65	50	30	13	23	9	4.11	6.50
HB03-8/100	M8x100	8/65	45	45		45			
HB03-8/120	M8x120	8/65	55	65		63			
HB03-10/90	M10x90	10/70	65	35	25	17	11	6.47	9.70
HB03-10/110	M10x110	10/70	65	45		37			
HB03-10/130	M10x130	10/70	65	65		57			
HB03-12/110	M12x130	12/95	80	35	40	15	13	9.64	12.40
HB03-12/135	M12x135	12/95	80	45		40			
HB03-12/145	M12x145	12/95	80	65		50			

** Loads are for C25 hrength concrete*

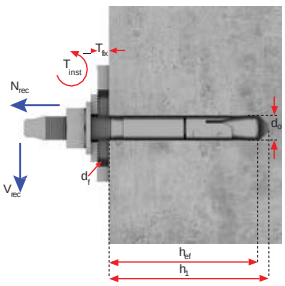

HB05 Shell bolt

Product code	Size M x L (mm)	Hole d_o / h_1 (mm)	Embed depth h_{ef} (mm)	Thread length f (mm)	max torque T_{in1} (Nm)	thick. T (mm)	hole d_o (mm)	Rec. tensile load N_{rec} (kN)	Rec. shear load V_{rec} (kN)
HB05-6/60	M6x80	10/65	40	21	7	10	7	3.50	3.30
HB05-8/80	M8x80	12/65	45	36	15	20	9	4.10	6.70
HB05-10/90	M10x80	14/75	55	40	30	20	11	5.20	11.00
HB05-12/100	M12x100	16/85	65	44	40	25	13	6.60	13.40

** Loads are for dense block walls*

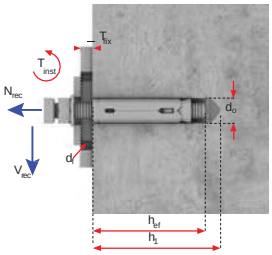

HB07 Chemical bolt

Product code	Size M x L (mm)	Hole d_o / h_1 (mm)	Embed depth h_{ef} (mm)	Thread length f (mm)	max torque T_{in1} (Nm)	thick. T (mm)	hole d_o (mm)	Rec. tensile load N_{rec} (kN)	Rec. shear load V_{rec} (kN)
HB07-8/110	M8x110	10/82	80	25	7	14	9	8.80	10.20
HB07-10/130	M10x130	12/92	90	35	15	21	11	12.30	15.60
HB07-12/160	M12x160	14/115	110	40	25	28	13	18.30	22.00

** Loads are for C25 hrength concrete*

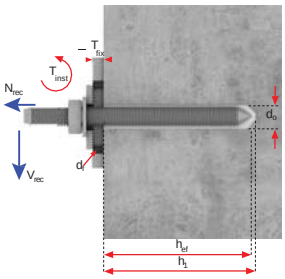

Epoxy Acralite - Chemical adhesive

Product code	Rec. tensile load N_{rec} (kN)	Rec. shear load V_{rec} (kN)
HB07-8/110	0.40	1.1
HB07-10/130	0.40	1.1
HB07-12/160	0.40	1.1

** Loads are for hollow masonry*

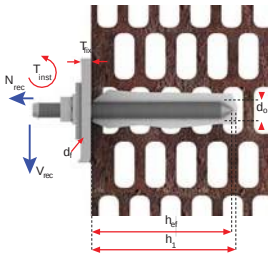

- Material: Stainless Steel & Galvanized Steel
- Allowable loads are determined according to third party testing
- Please check Anchor Bolts Product Technical Catalog for further information

Accessories for Sub Channel Systems - Technical details

HB-WP Wall Plug

Product code	Size M x L (mm)	Hole d_o / h_1 (mm)	Embed depth h_{ef} (mm)	Thread length f (mm)	max torque T_{inst} (Nm)	thick. T (mm)	hole d_o (mm)	Rec. tensile load N_{rec} (kN)	Rec. shear load V_{rec} (kN)
HBWP-8/80	8x80	8/55	45	25	15	20	9	1.60	2.75
HBWP-8/100	8x100	8/55	45	45	15	40	9		
HBWP-10/80	10x80	10/60	50	20	30	15	11	2.00	3.20
HBWP-10100	M10x100	10/60	50	40	30	35	11		

** Loads are for C25 concrete walls*

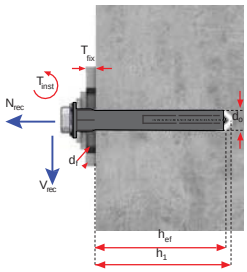

HB-STS
Self tabbing screw

Product code	Size ØxL (mm)
HBSTS-JT3	5.5x30
HBSTS-JT9	6x30

HMLN Lock Nut

Product code	Size M (mm)
HMLN-6	6
HMLN-8	8
HMLN-10	10
HMLN-12	12

HTI
Thermal break pad

HBI
Isolator pad

HBV
Isolator pad

DIN933 Hex Bolt

Product code	Size MxL (mm)
DIN933-6/25	6x25
DIN933-8/25	8x25
DIN933-10/30	10x30
DIN933-12/45	12x50
DIN933-16/50	16x50

DIN934 Hex Nut

Product code	Size MxL (mm)
DIN934-6	6
DIN934-8	8
DIN934-8	10
DIN934-12	12
DIN934-16	16

DIN125 Round Washer

Product code	Size MxL (mm)
DIN125-6	6
DIN125-8	8
DIN125-10	10
DIN125-12	12
DIN125-16	16

DIN 9021 Wide Washer

Product code	Size MxL (mm)
DIN9021-6	6
DIN9021-8	8
DIN9021-10	10
DIN9021-12	12
DIN9021-16	16

HMP Steel Sub Channel Application Pictures

A flexible and rigid sub channel system suitable to take the variation in projection sizes and turn in corners. T31 and suitable anchors accommodate this system to enable secure installation.

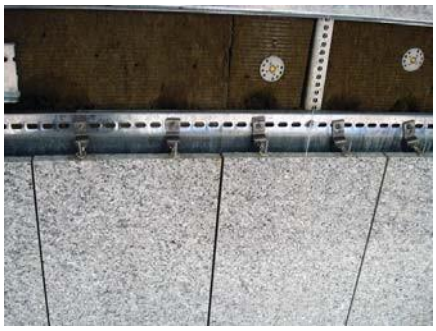

Sub channel support system provides adjustable in lateral direction. This enables quick positioning of the anchors along the horizontal channels to meet the T31 bolts fixed on the back of the stone panels.

Sub channel support system designed to bear heavy loads at projection sizes exceeding 40 cm. Stone panels are installed using T31 undercut bolts.

Stone installation made on to stainless steel channel system. T31 undercut bolt is used with specially designed anchors. T31 bolt is fastened on to the anchor using contra nuts.

Sub channel support system provides adjustable in lateral direction. This enables quick positioning of the anchors along the horizontal channels to meet the T31 bolts fixed on the back of the stone panels.

A flexible and rigid sub channel system suitable to take the variation in projection sizes and turn in corners. T31 and suitable anchors accommodate this system to enable secure installation.

Sub channel support system provides adjustable in lateral direction. This enables quick positioning of the anchors along the horizontal channels to meet the T31 bolts fixed on the back of the stone panels.

A flexible and rigid sub channel system suitable to take the variation in projection sizes and turn in corners. T31 and suitable anchors accommodate this system to enable secure installation.

HMP-ALU Aluminium Sub Channel Application Pictures

A flexible and rigid sub channel system suitable to take the variation in projection sizes and turn in corners. T31 and suitable anchors accommodate this system to enable secure installation.

Sub channel support system provides adjustable in lateral direction. This enables quick positioning of the anchors along the horizontal channels to meet the T31 bolts fixed on the back of the stone panels.

Sub channel support system designed to bear heavy loads at projection sizes exceeding 40 cm. Stone panels are installed using T31 undercut bolts.

Stone installation made on to stainless steel channel system. T31 undercut bolt is used with specially designed anchors. T31 bolt is fastened on to the anchor using contra nuts.

Sub channel support system provides adjustable in lateral direction. This enables quick positioning of the anchors along the horizontal channels to meet the T31 bolts fixed on the back of the stone panels.

A flexible and rigid sub channel system suitable to take the variation in projection sizes and turn in corners. T31 and suitable anchors accommodate this system to enable secure installation.

A flexible and rigid sub channel system suitable to take the variation in projection sizes and turn in corners. T31 and suitable anchors accommodate this system to enable secure installation.

cort@rtec

www.cortartec.net